HM Series - Standard

Hand Valves, Gauge Valves & Manifolds

CRANE Instrumentation & Sampling, HOKE®
PO Box 4866 • Spartanburg, SC 29305-4866
(864) 574-7966 • www.hoke.com

Index

Technical Specifications 3

How To Order / Optional Extras 6, 10, 22, 24

Hand Valves 4

Gauge Valves 7

Manifolds 11

HBDBB Valves 23

Integral / GYROLOK® Connections 25

NPT High Tolerance Thread Specifications 26

Option Detail: Anti-Tamper and Lockable Bonnets 27

Optional Detail: Round Handwheels 28

Option Detail: Panel Nut on Bonnet 29

Accessories: Mounting Bracket Kits 30

Guidance On Use ..... Inside Back Cover

Hand Valves, Gauge Valves and Manifolds at a Glance

HOKE® offers a variety of precision engineered valves and 2, 3, and 5-valve Hand Valves, Gauge Valves & Manifolds in Direct and Remote Mount styles with vent configurations to meet most flow, pressure and level measurement application requirements. HOKE® 2–valve manifolds are designed for static pressure and liquid level applications; the 3 and 5 valve manifolds are well suited for use with most differential pressure transmitters and can accept both female and flange process impulse line connections.

HOKE® Hand Valves, Gauge Valves & Manifolds have been designed to provide the safest possible connection and mounting of instruments. Standard features include:

- Full 316/316L Dual Certified stainless steel components.
- Full compliance of NACE MR-01-75 (ISO 15156 Latest Edition) specifications.
- Laser engraved identification.
- HOKE® Close tolerance NPT threads to ensure maximum engagement with mating threaded components. (Page 26)
- Available with option of integral / GYROLOK® tube fitting connections.
  Please refer to the HOKE® HM Series - Integral / GYROLOK® catalog on HOW TO ORDER.
- Choice of exotic alloys i.e., MONEL®, Duplex, Super Duplex, Titanium, HASTELLOY®, Alloys 625, 825, 6Mo.
- Optional mounting bracket kits available.
- Optional anti-tamper and locking handles and round wheel handles available.
- Direct mount manifolds with IEC 61518 Type B Outlets.

Pressure Equipment Directive.

Due to internal bore size and internal volumes up to and including 1”-inch/25mm, products offered in this catalog comply with S.E.P (Sound Engineering Practice) article 3, paragraph 3 of the Pressure Equipment Directive P.E.D. 97/23/EC and therefore CE marking is not applicable.

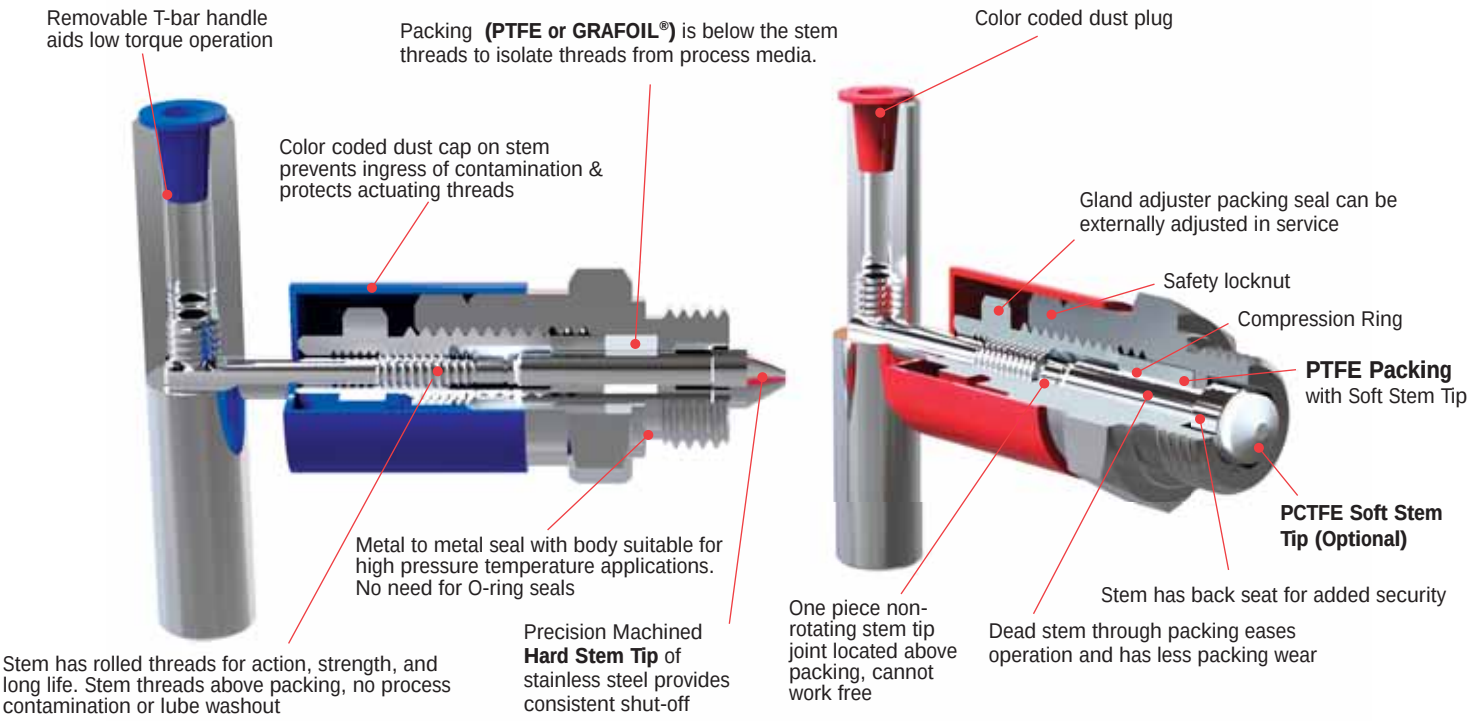

Note: PCTFE Soft Stem Tip (Option) is only available with PTFE Packing

PRESSURE TEMPERATURE CHART

PTFE PACKING

- Maximum pressure 6000 psi (413 bar) at 212° F (100° C)
- Maximum pressure 4000 psi (275 bar) at 392° F (200° C)

(PTFE packing rated to maximum temperature of 392° F (200° C)

GRAFOIL® PACKING [AA (10,000 psi) not available]

- Maximum pressure 6000 psi (413 bar) at 212° F (100° C)
- Maximum pressure 3300 psi (230 bar) at 842° F (450° C)

OTHER FEATURES

- Hydrostatically tested to 1.5 time's maximum working pressure.
- Wide variety of process connections available by arrangement.
- Bleed & blind plugs are available.
- Panel mounting valve available on request.
- PCTFE Soft tip option available for special application (Max working temperature = 120° C).
- All valves and manifolds are individually boxed for protection and storage.
- Laser engraved identification.
- Valves have trace code on body with original mill certificates available all to EN 10204-3.1.
- All special materials available from NORSOK M-650 approved mills, on request. See HOW TO ORDER.
- Ø 4.76 Standard thru bore (CV = 0.4) Fully open.
- Bonnet locking pin safely locks the bonnet to body.

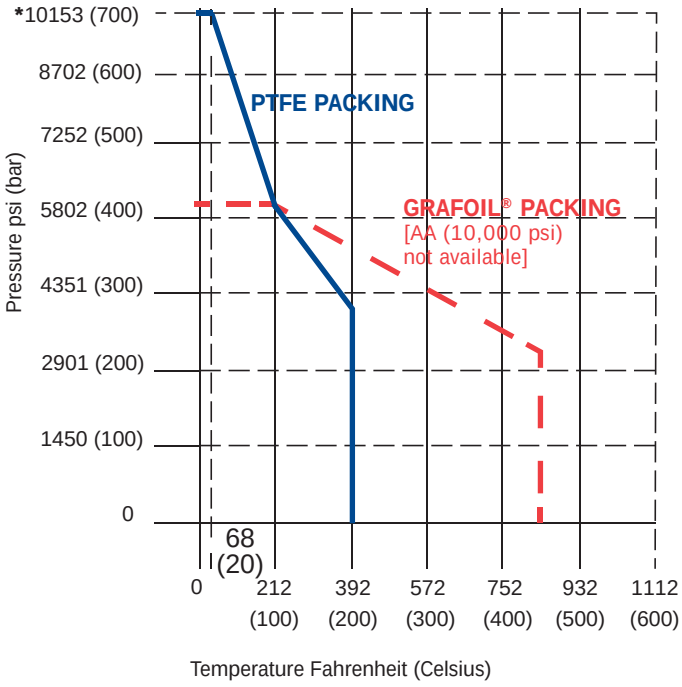

*** 10,000 psi option available on non-direct valves. See HOW TO ORDER pages.**

SINGLE BLOCK HAND VALVE
MODEL-HM25

ISOLATE	Blue
VENT	Red
EQUALIZE	Green

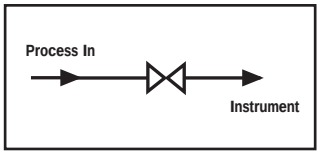

Weight=1.1 lbs(0.5 kg)

Also available in a range of other materials and options
(See **HOW TO ORDER** Data Sheet Pg. 6).

Application
High integrity instrument isolation of pressure gauges and pressure transmitters.

Female - Female Option

Valve Shown with ½" NPT Inlet & Outlet

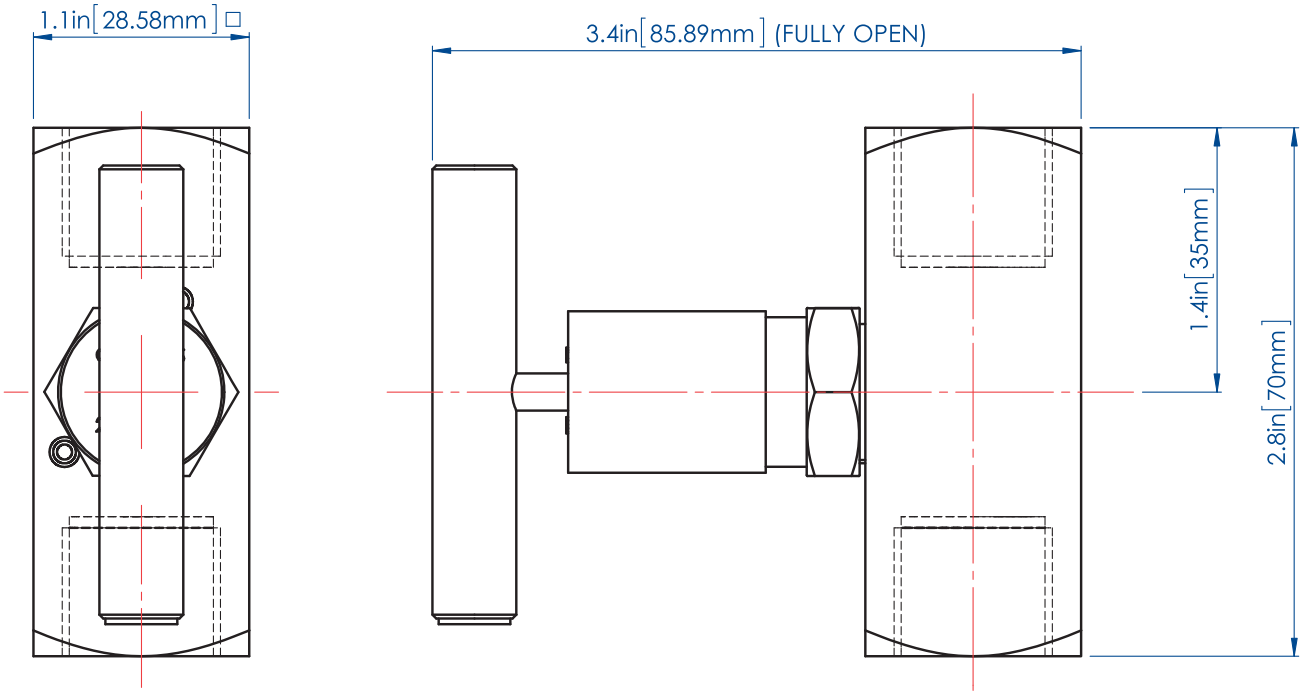

Dimensions shown in inches (millimeters) are for reference only and are subject to change.

ISOLATE	Blue
VENT	Red
EQUALIZE	Green

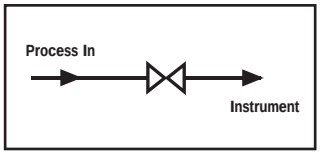

Weight=1.1 lbs(0.5 kg)

Also available in a range of other materials and options
(See **HOW TO ORDER** Data Sheet Pg. 6).

Application
High integrity instrument isolation of pressure gauges and pressure transmitters.

Male - Female Option

Valve Shown with ½" NPT Inlet & Outlet

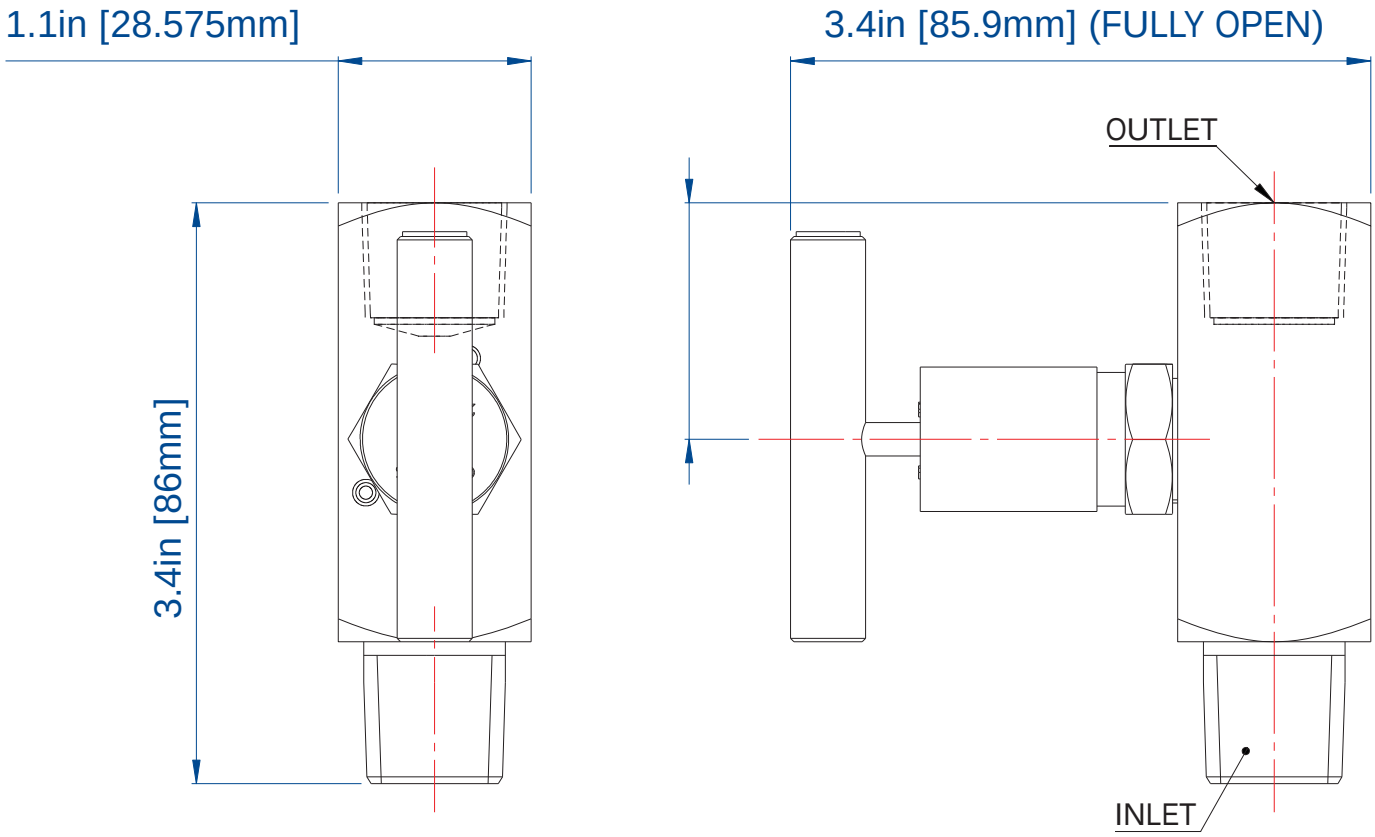

Dimensions shown in inches (millimeters) are for reference only and are subject to change.

Ordering Multiple Options

HOKE HM Valves and Manifolds are available with a wide variety of options that enable valve configurations customized to meet specific requirements. Please select or add designators from the ordering combinations as shown below:

How To Order

Standard items in bold.

Typical Ordering Part Number

HM25 1 1 F 8 6MO AA

TIP
1 = Hard
2 = Soft

PACKING
1 = PTFE
2 = GRAFOIL® [AA (10,000 psi) not available]

CONNECTION
F = Female inlet x Female outlet
M = Male inlet x Male outlet
L = Male inlet x Female outlet

SIZE
4 = ¼" NPT
6 = 3/8" NPT
8 = ½" NPT

ALLOY
YL = 316/316L
HC = HASTELLOY® C276
M = MONEL®
D50 = Super Duplex
TI = Titanium
TB = Titanium Blue Anodized
DX3 = Duplex
625 = 625 INCONEL®
825 = 825 INCONEL®
6MO = 6%Mo
E = Carbon Steel

OPTIONS
AA = 10,000 psi Rated
AD = Anti Tamper Isolate
AE = Lockable Isolate
AH = BSPP Connections
AO = Norsok M-650 Material Required
AP = Panel nut on bonnets
AR = Firesafe
AT = Round Hand Wheel for Isolate
BE = Round Hand Wheel - Lockable Isolate

Note: Keys are not included and are sold separately. Order part number HMATHDL-316 for key.

Note: The body & trim parts on all 316/316L Valves & Manifolds comply to NACE MR-01-75 & NORSOK M-650 as standard.

Please consult the factory or your local distributor for information on special connections. O-rings, operating pressures, & temperature ratings.

⚠ When selecting products for specific applications users should refer to our notice at the bottom of page 1. And the guidance of Use of Equipment on the Inside Back Cover Page.

MULTI-PORT GAUGE VALVE
MODEL-HM681

ISOLATE	Blue
VENT	Red
EQUALIZE	Green

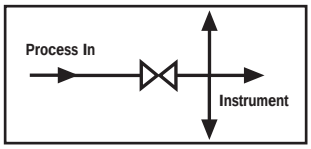

Weight=1.76 lbs(0.8 kg)

Also available in a range of other materials and options
(See **HOW TO ORDER** Data Sheet Pg. 10).

Application
High integrity instrument isolation of pressure gauges and pressure transmitters.

Valve Shown with ½" NPT Inlet & Outlet

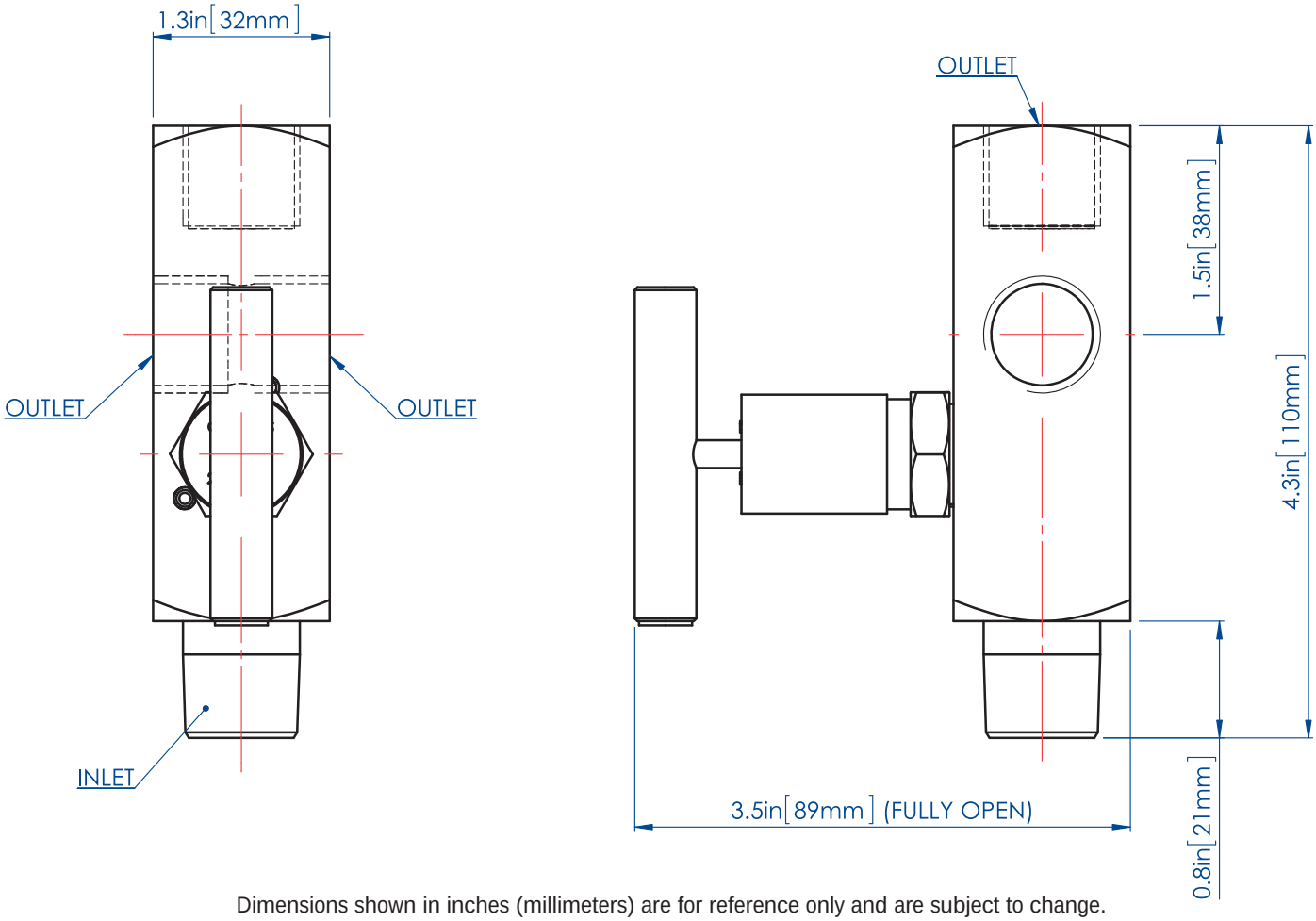

Dimensions shown in inches (millimeters) are for reference only and are subject to change.

SINGLE BLOCK & BLEED GAUGE VALVE
MODEL-HM682

ISOLATE	Blue
VENT	Red
EQUALIZE	Green

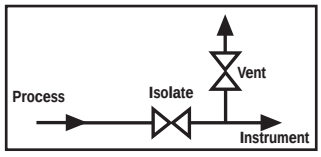

Weight=2.2 lbs(1.0 kg)

Also available in a range of other materials and options
(See **HOW TO ORDER** Data Sheet Pg. 10).

Application
High integrity instrument isolation of pressure gauges and pressure transmitters.

Valve Shown with ½" NPT Inlet & Outlet & ¼"NPT Vent Plug (Supplied loose)

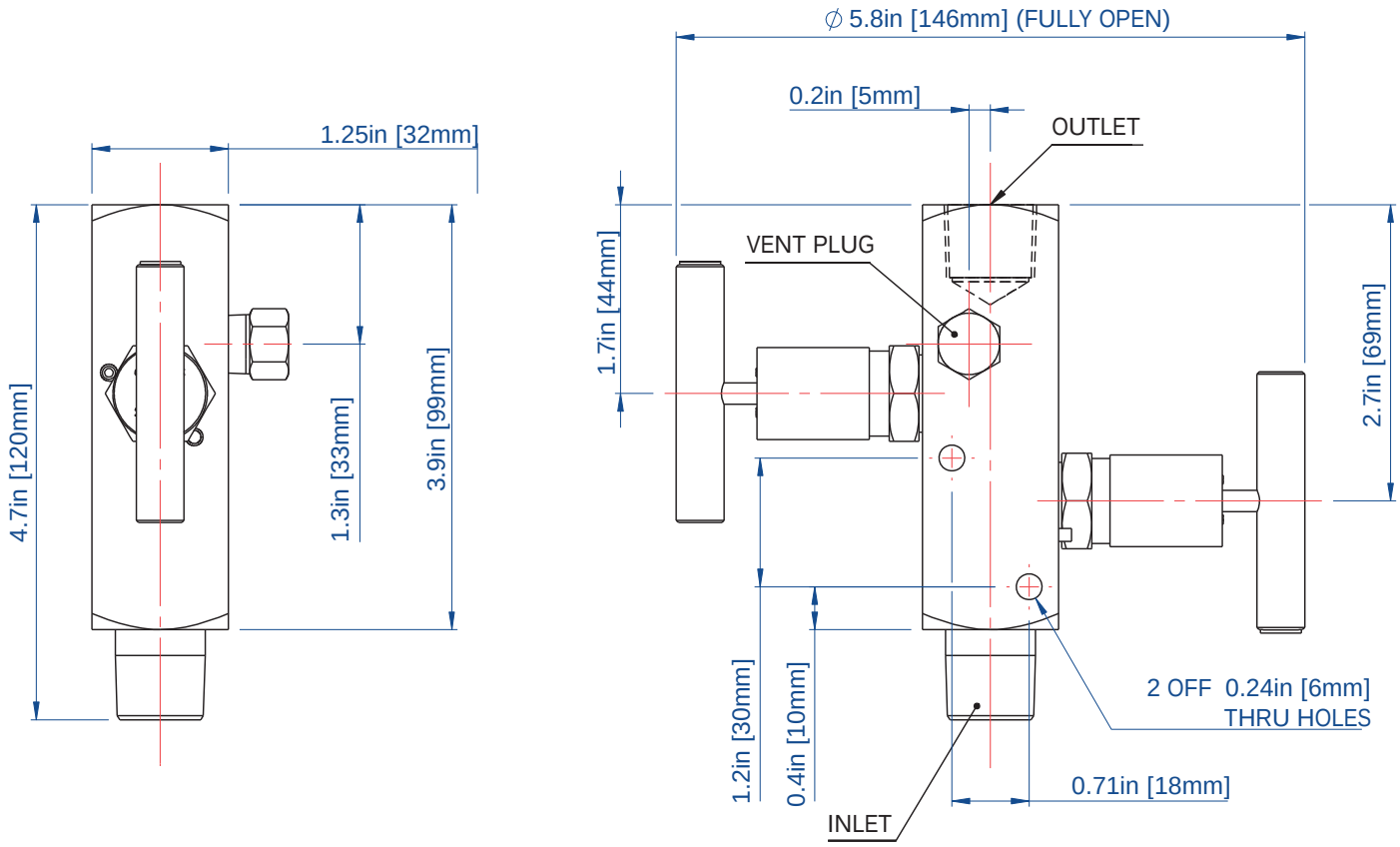

Dimensions shown in inches (millimeters) are for reference only and are subject to change.

DOUBLE BLOCK & BLEED GAUGE VALVE
MODEL-HM683

ISOLATE	Blue
VENT	Red
EQUALIZE	Green

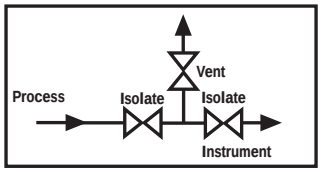

Weight=2.86 lbs(1.3 kg)

Also available in a range of other materials and options
(See **HOW TO ORDER** Data Sheet Pg. 10).

Application
High integrity instrument isolation of pressure gauges and pressure transmitters.

Valve Shown with ½" NPT Inlet & Outlet & ¼"NPT Vent Plug (Supplied loose)

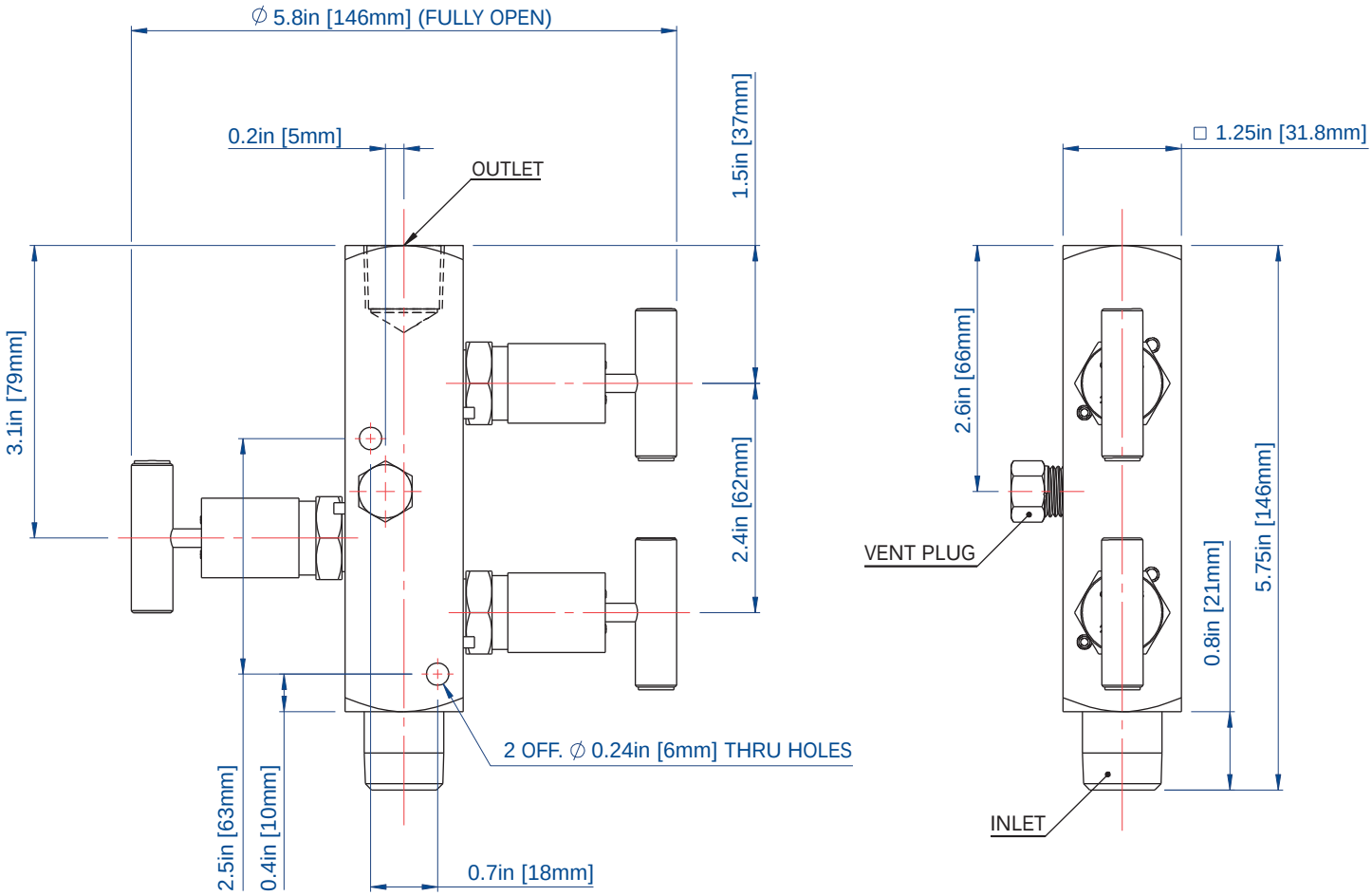

Dimensions shown in inches (millimeters) are for reference only and are subject to change.

Ordering Multiple Options

HOKE HM Valves and Manifolds are available with a wide variety of options that enable valve configurations customized to meet specific requirements. Please select or add designators from the ordering combinations as shown below:

How To Order

Standard items in bold.

Typical Ordering Part Number

HM68 2 1 1 F 8 6MO AA

# of VALVES
1
2
3

TIP
1 = Hard
2 = Soft

PACKING
1 = PTFE
2 = GRAFOIL® [AA (10,000 psi) not available]

CONNECTION
F = Female inlet X Female outlet
M = Male inlet X Male outlet
L = Male inlet X Female outlet

SIZE
4 = ¼" NPT
6 = 3/8"NPT
8 = ½" NPT

ALLOY
YL = 316/316L
HC = HASTELLOY® C276
M = MONEL®
D50 = Super Duplex
TI = Titanium
TB = Titanium Blue Anodized
DX3 = Duplex
625 = 625 INCONEL®
825 = 825 INCONEL®
6MO = 6%Mo
E = Carbon Steel

OPTIONS
AA = 10,000 psi Rated
AB = Anti Tamper Vent(s)
AC = Lockable Vent(s)
AD = Anti Tamper Isolate
AE = Lockable Isolate
AH = BSPP Connections
AO = Norsok M-650 Material Required
AP = Panel nut on bonnets
AR = Firesafe
AS = Round Hand Wheel for Vent
AT = Round Hand Wheel for Isolate
BC = Round Hand Wheel - Lockable Vent
BE = Round Hand Wheel - Lockable Isolate

Note: Keys are not included and are sold separately. Order part number HMATHDL-316 for key.

Note: The body & trim parts on all 316/316L Valves & Manifolds comply to NACE MR-01-75 & NORSOK M-650 as standard.

Please consult the factory or your local distributor for information on special connections. O-rings, operating pressures, & temperature ratings.

⚠ When selecting products for specific applications users should refer to the notice at the bottom of page 1 and the guidance of Use of Equipment on the Inside Back Cover Page.

REMOTE MOUNT 2-VALVE MANIFOLD
MODEL-HM8232

ISOLATE	Blue
VENT	Red
EQUALIZE	Green

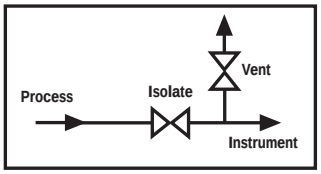

Weight=1.98 lbs(0.9 kg)

Also available in a range of other materials and options
(See **HOW TO ORDER** Data Sheet Pg. 22).

Using the 2-valve manifold
In normal operation the “isolate” valve is open while the “vent” valve is closed. To remove the instrument, first close the “isolate” valve, then open the “vent” valve to relieve pressure upstream of the “isolate” valve.

Calibration option
By connecting a calibration gauge to the vent port, it is possible to check the calibration of the instrument without removing it from the installation.

Valve Shown with ½” NPT Inlet & Outlet & ¼”NPT Vent Plug (Supplied loose)

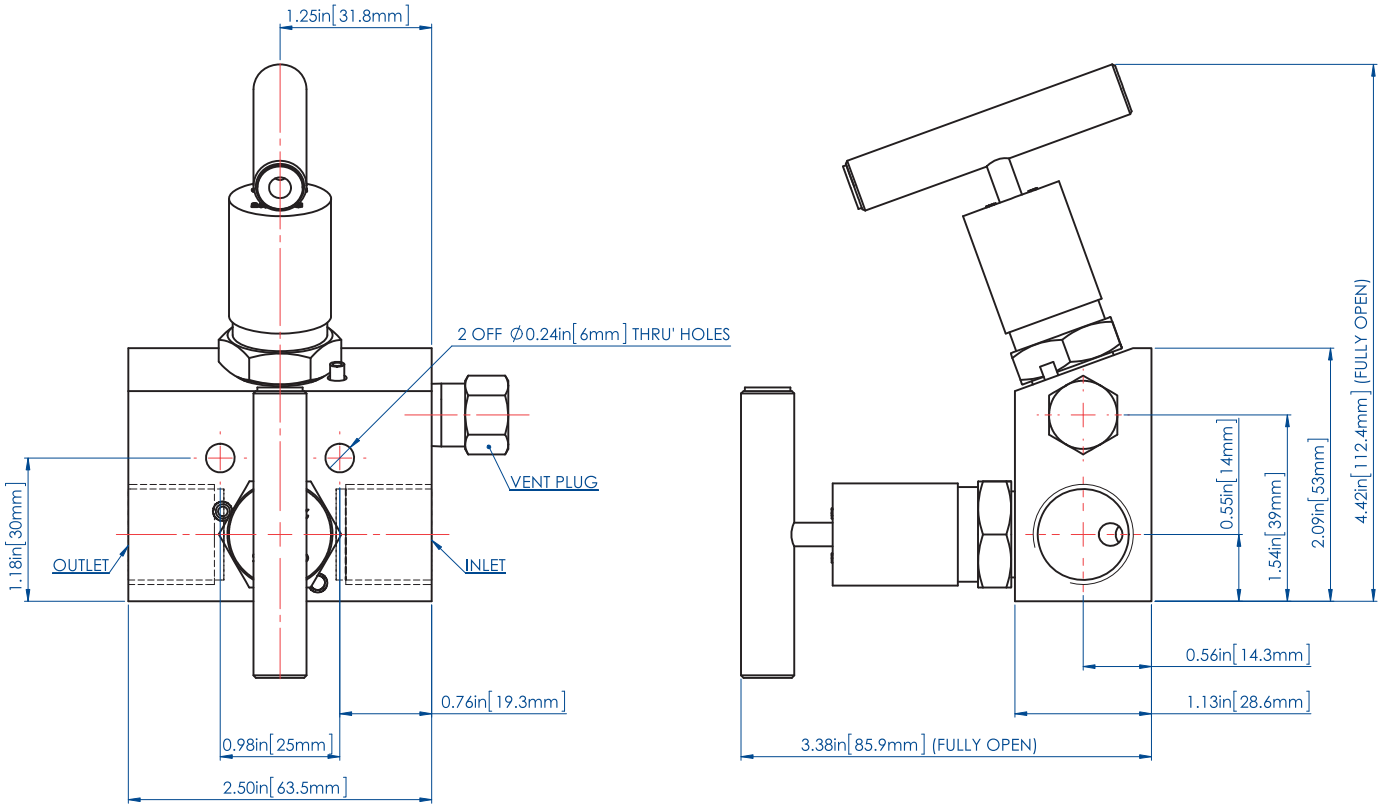

Dimensions shown in inches (millimeters) are for reference only and are subject to change.

DIRECT MOUNT 2-VALVE MANIFOLD
MODEL-HM8212

ISOLATE	Blue
VENT	Red
EQUALIZE	Green

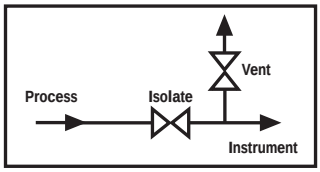

Weight=3.08 lbs(1.4 kg)

Also available in a range of other materials and options (See **HOW TO ORDER** Data Sheet Pg. 22).

Using the 2-valve manifold
In normal operation the "isolate" valve is open while the "vent" valve is closed. To remove the instrument, first close the "isolate" valve, then open the "vent" valve to relieve pressure upstream of the "isolate" valve.

Calibration option
By connecting a calibration gauge to the vent port, it is possible to check the calibration of the instrument without removing it from the installation.

Note: Model-HM8212 **NOT** available with option AA — 10,000 psi

Valve Shown with ½" NPT Inlet & ¼"NPT Vent Plug (Supplied loose)

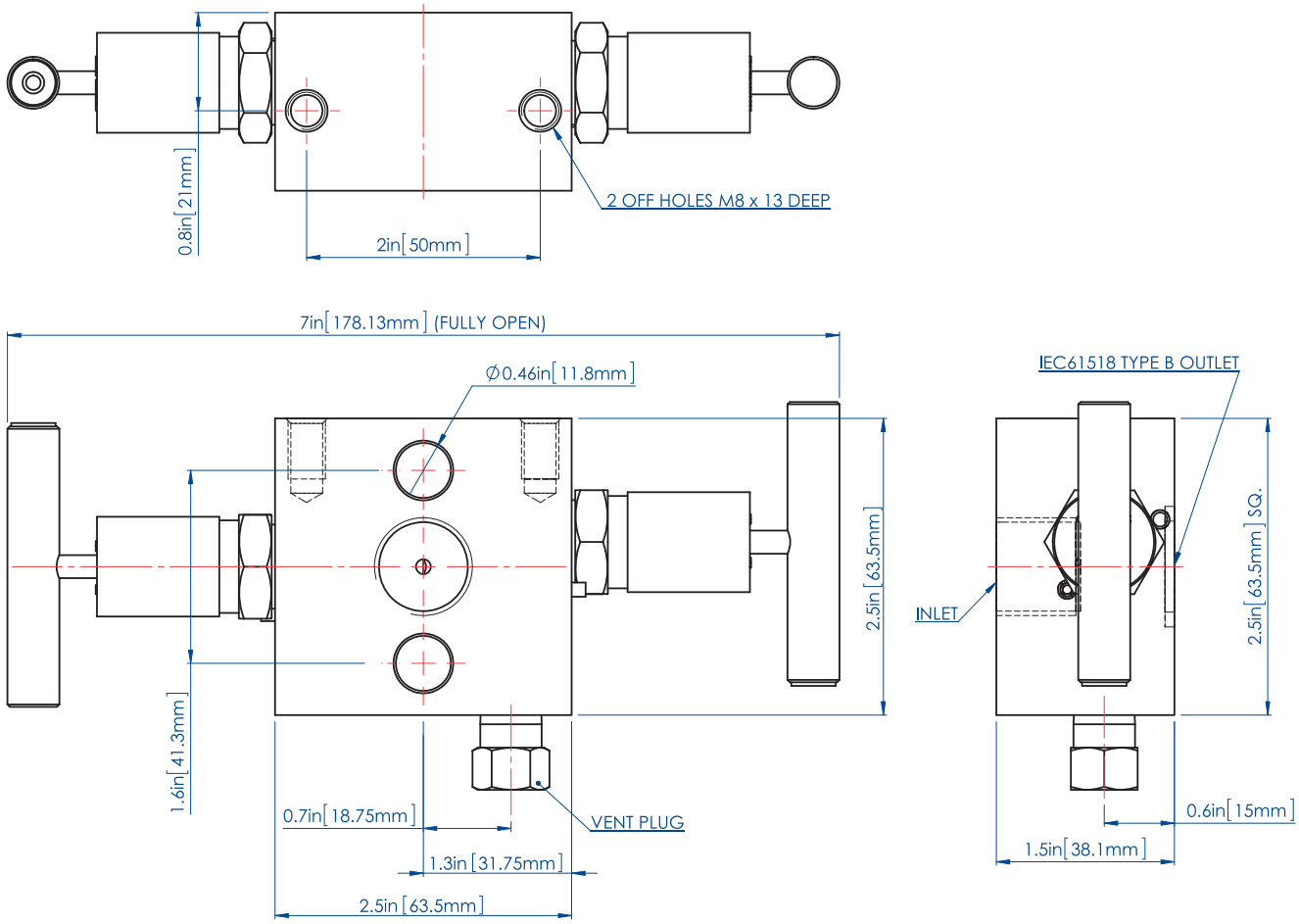

Dimensions shown in inches (millimeters) are for reference only and are subject to change.

REMOTE MOUNT 2-VALVE MANIFOLD (FLAT FACE) MODEL-HM8262

ISOLATE	Blue
VENT	Red
EQUALIZE	Green

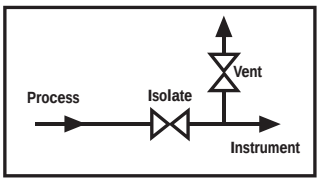

Weight=2.6 lbs(1.2 kg)

Also available in a range of other materials and options
(See **HOW TO ORDER** Data Sheet Pg. 22).

Using the 2-valve manifold
In normal operation the "isolate" valve is open while the "vent" valve is closed. To remove the instrument, first close the "isolate" valve, then open the "vent" valve to relieve pressure upstream of the "isolate" valve.

Calibration option
By connecting a calibration gauge to the vent port, it is possible to check the calibration of the instrument without removing it from the installation.

Valve Shown with ½" NPT Inlet & Outlet & ¼"NPT Vent Plug (Supplied loose)

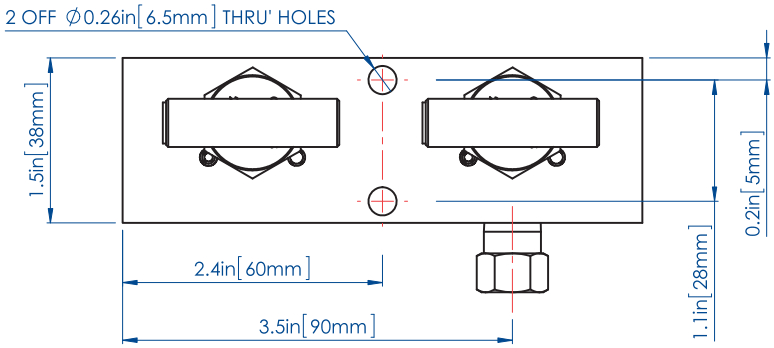

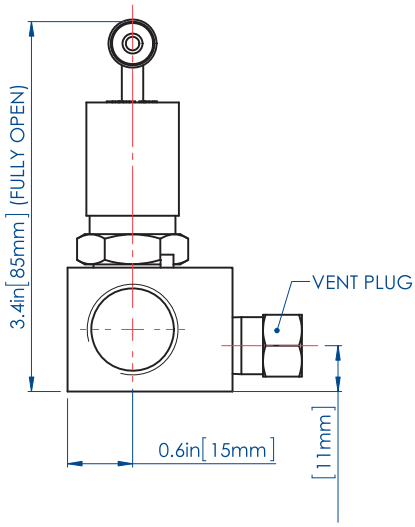

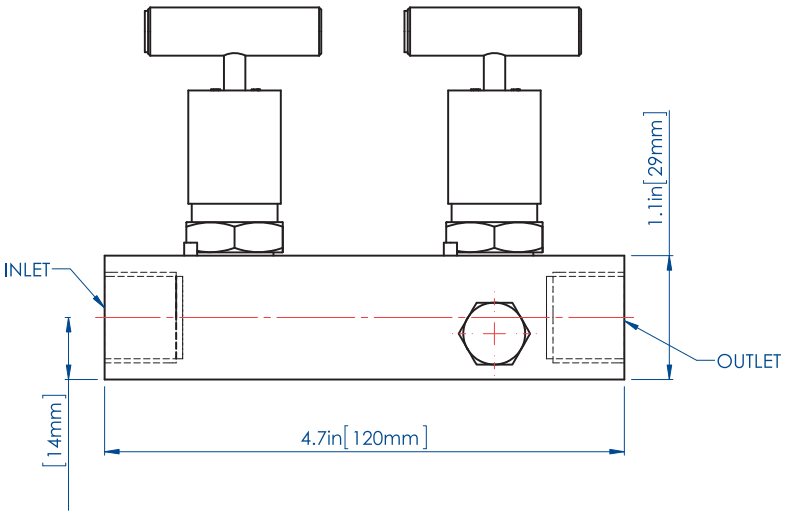

Dimensions shown in inches (millimeters) are for reference only and are subject to change.

DIRECT MOUNT 2-VALVE MANIFOLD (ENCLOSURE) MODEL-HM8292

ISOLATE	Blue
VENT	Red
EQUALIZE	Green

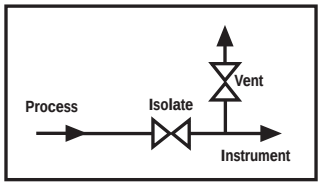

Weight=6.2 lbs(2.8 kg)

Also available in a range of other materials and options (See **HOW TO ORDER** Data Sheet Pg. 22).

Using the 2-valve manifold

In normal operation the "isolate" valve is open while the "vent" valve is closed. To remove the instrument, first close the "isolate" valve, then open the "vent" valve to relieve pressure upstream of the "isolate" valve.

Calibration option

By connecting a calibration gauge to the vent port, it is possible to check the calibration of the instrument without removing it from the installation.

Note: Model-HM8292 **NOT** available with option AA — 10,000 psi

Valve Shown with ½" NPT Inlet & ¼"NPT Vent Plug (Supplied loose)

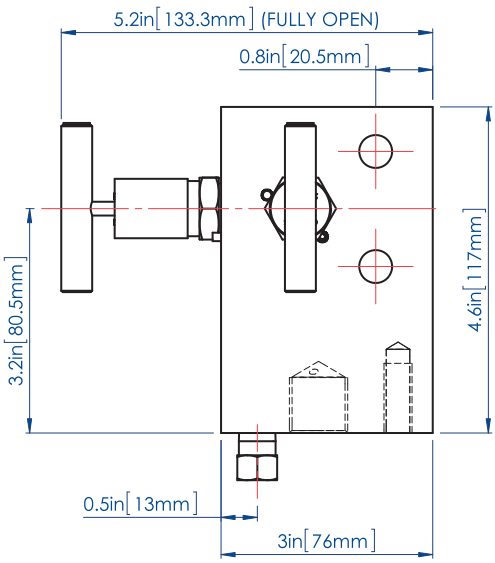

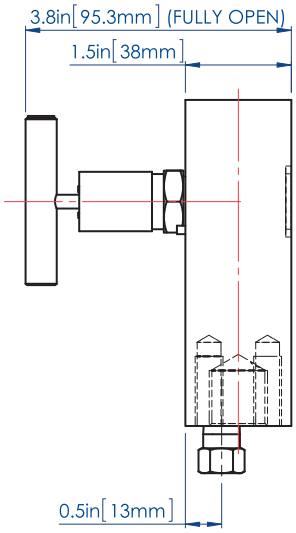

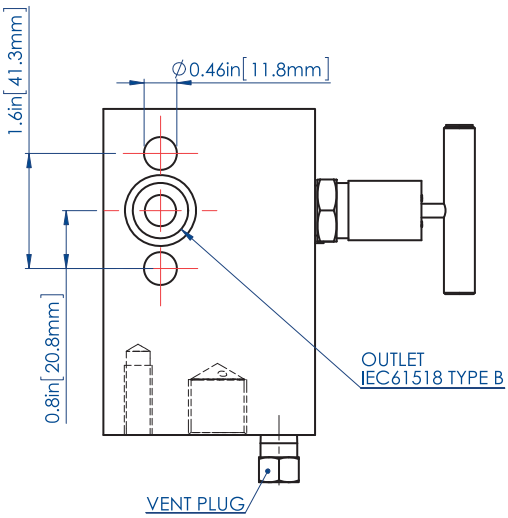

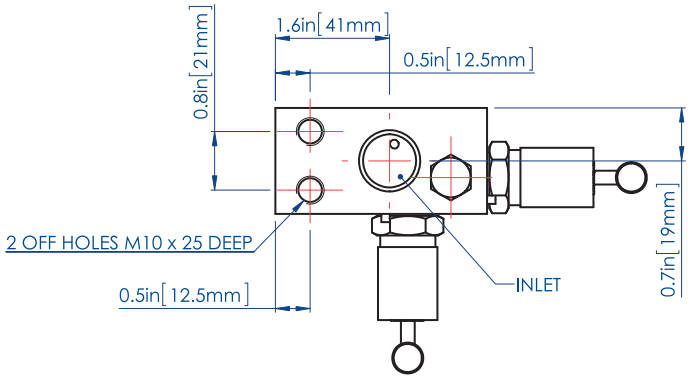

Dimensions shown in inches (millimeters) are for reference only and are subject to change.

REMOTE MOUNT 2-VALVE MANIFOLD
MODEL-HM82_GAM8
WITH ½" INTEGRAL GA ADAPTER

ISOLATE	Blue
VENT	Red
EQUALIZE	Green

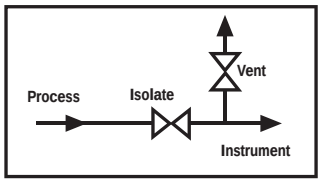

Weight=3.3 lbs(1.5 kg)

Also available in a range of other materials and options
(See **HOW TO ORDER** Data Sheet Pg. 22).

Using the 2-valve manifold
In normal operation the "isolate" valve is open while the "vent" valve is closed. To remove the instrument, first close the "isolate" valve, then open the "vent" valve to relieve pressure upstream of the "isolate" valve.

Calibration option
By connecting a calibration gauge to the vent port, it is possible to check the calibration of the instrument without removing it from the installation.

Valve Shown with ½" NPT Inlet & Outlet & ¼"NPT Vent Plug (Supplied loose)

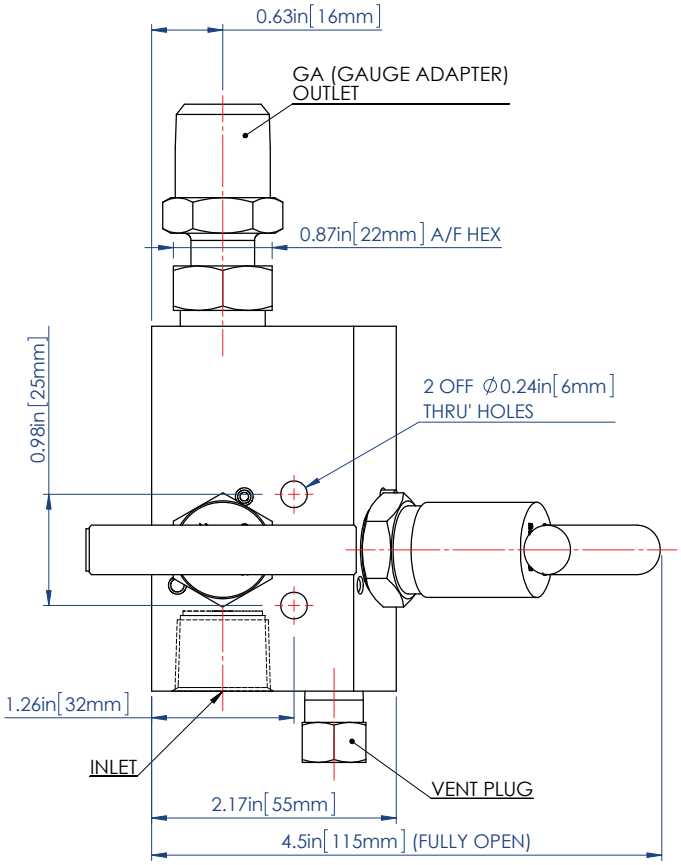

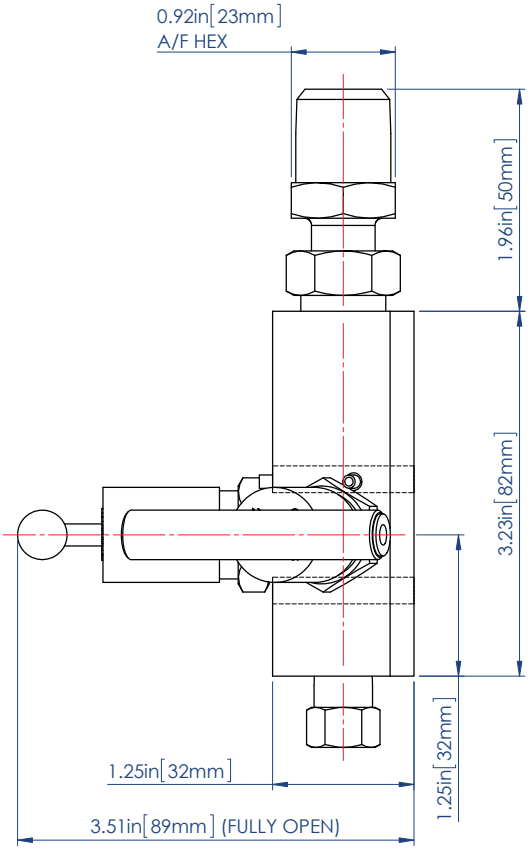

Dimensions shown in inches (millimeters) are for reference only and are subject to change.

REMOTE MOUNT 3-VALVE MANIFOLD
MODEL-HM8332

ISOLATE	Blue
VENT	Red
EQUALIZE	Green

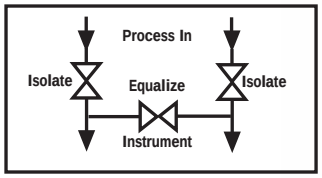

Weight=3.08 lbs(1.4 kg)

Also available in a range of other materials and options (See **HOW TO ORDER** Data Sheet Pg. 22).

Using the 3-valve manifold

In normal operation the “isolate” valves are open while the “equalize” valve is closed.

This provides a differential pressure reading to the pressure gauge or transmitter. To zero the instrument, first close the downstream “isolate” valve then open the “equalize” valve and adjust the zero setting on the instrument.

Valve Shown with ½” NPT Inlet & Outlet

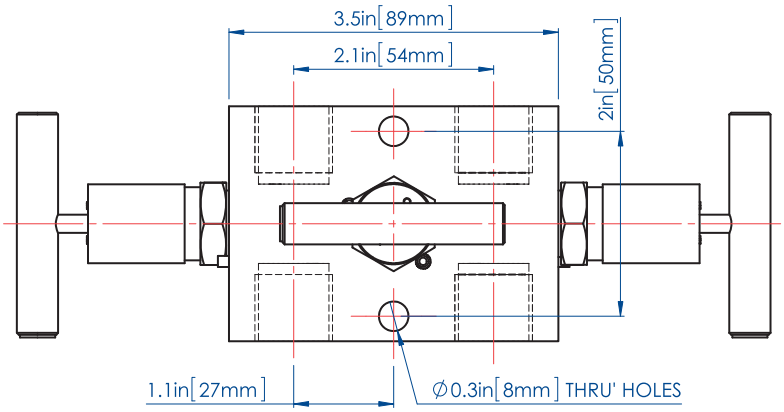

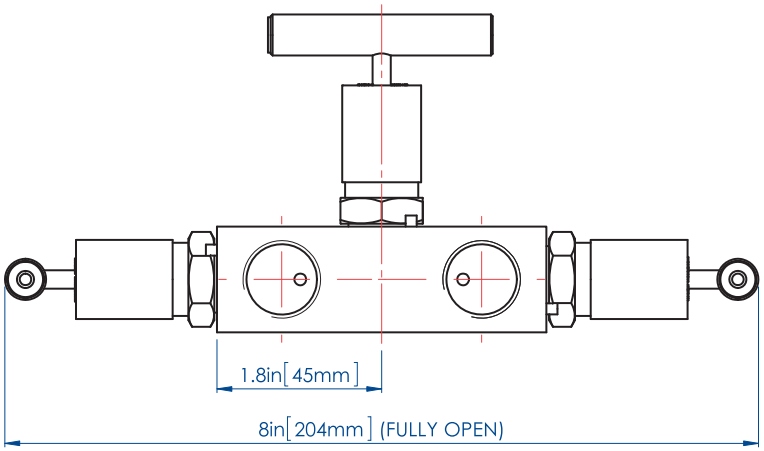

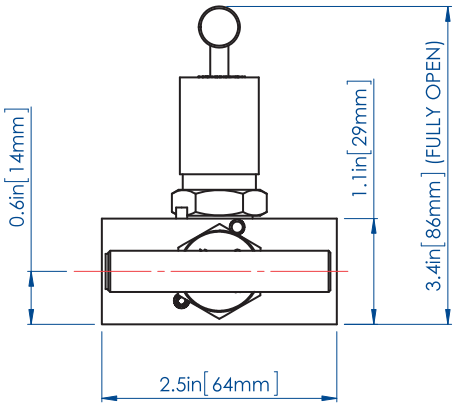

Dimensions shown in inches (millimeters) are for reference only and are subject to change.

DIRECT MOUNT 3-VALVE MANIFOLD
MODEL-HM8312

ISOLATE	Blue
VENT	Red
EQUALIZE	Green

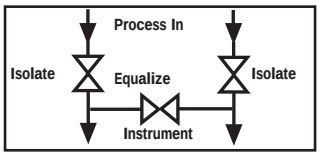

Weight=3.52 lbs(1.6 kg)

Also available in a range of other materials and options (See **HOW TO ORDER** Data Sheet Pg. 22).

Using the 3-valve manifold
In normal operation the "isolate" valves are open while the "equalize" valve is closed.

This provides a differential pressure reading to the pressure gauge or transmitter. To zero the instrument, first close the downstream "isolate" valve then open the "equalize" valve and adjust the zero setting on the instrument.

Note: Model-HM8312 **NOT** available with option AA — 10,000 psi

Valve Shown with ½" NPT Inlet

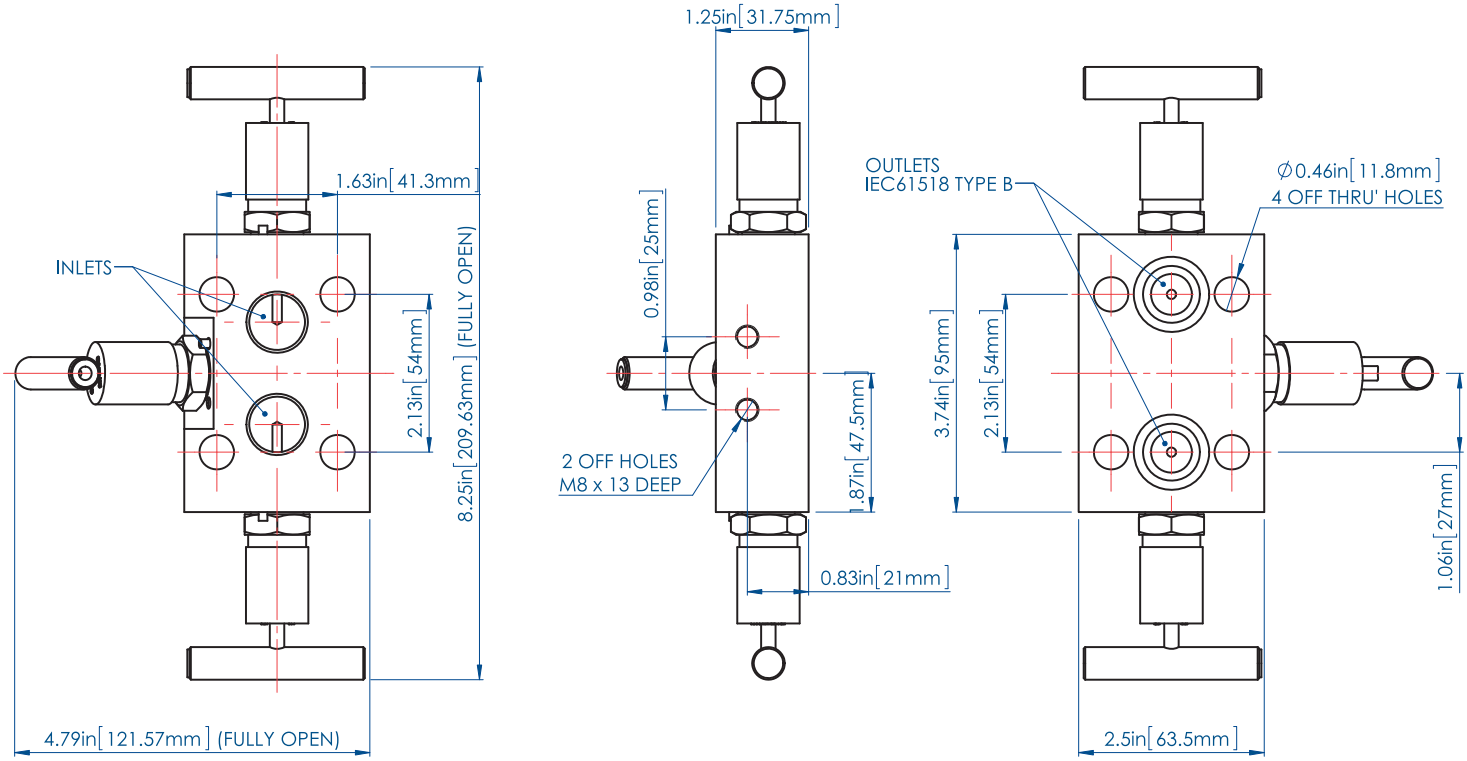

Dimensions shown in inches (millimeters) are for reference only and are subject to change.

DOUBLE BLOCK & BLEED GAUGE VALVE
MODEL-HM8322

ISOLATE	Blue
VENT	Red
EQUALIZE	Green

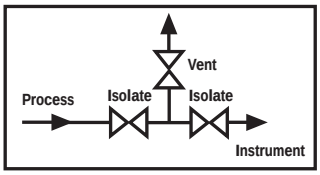

Weight=2.54 lbs(1.15 kg)

Also available in a range of other materials and options
(See **HOW TO ORDER** Data Sheet Pg. 22).

Application
High integrity instrument isolation of pressure gauges and pressure transmitters.

Valve Shown with 1/2" NPT Inlet & Outlet & 1/4" NPT Vent Plug (Supplied loose)

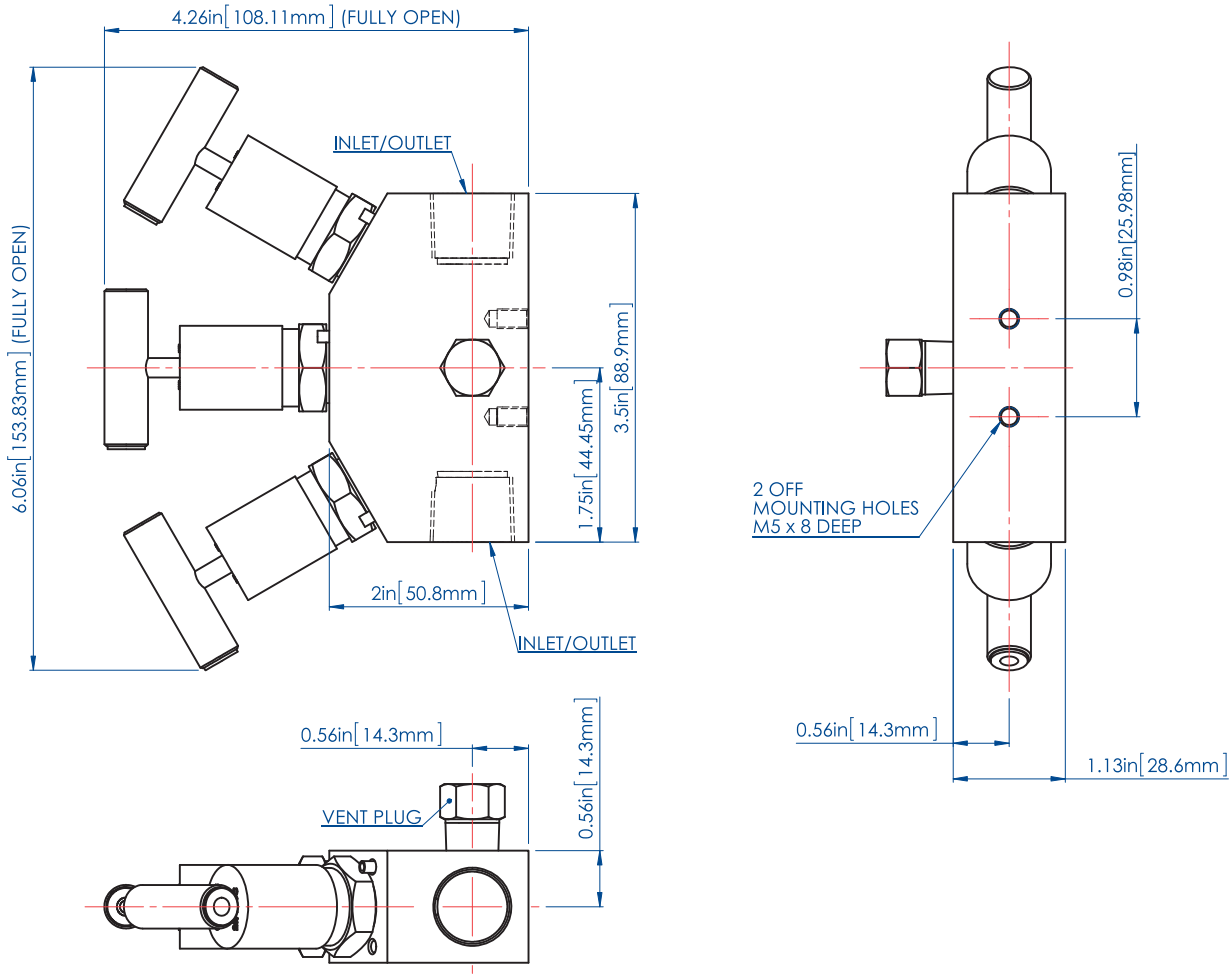

Dimensions shown in inches (millimeters) are for reference only and are subject to change.

REMOTE MOUNT 5-VALVE MANIFOLD
MODEL-HM8532

ISOLATE	Blue
VENT	Red
EQUALIZE	Green

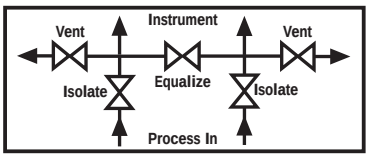

Weight=5.95 lbs(2.7 kg)

Also available in a range of other materials and options
(See **HOW TO ORDER** Data Sheet Pg. 22).

Note: Mounting Bracket Kit not available for Model-HM8532.

Using the 5-valve manifold

In normal operation the “isolate” valves are open while the “equalize” and “vent” valves are closed. This provides a differential pressure reading to the pressure gauge or transmitter.

To zero the instrument, first close both “vent” valves and the downstream “isolate” valve. Then open the “equalize” valve and adjust the zero setting on the instrument. To remove the instrument, first close both “isolate” valves, then open the “equalize” valves to relieve pressure between the manifold and the instrument.

Calibration options

An option provided by 5-valve manifolds which is not available on 3-valve types is connecting the “vent” port to known pressure sources to check the calibration of the instrument.

Valve Shown with ½” NPT Inlet & Outlet & ¼”NPT Vent Plugs (Supplied loose)

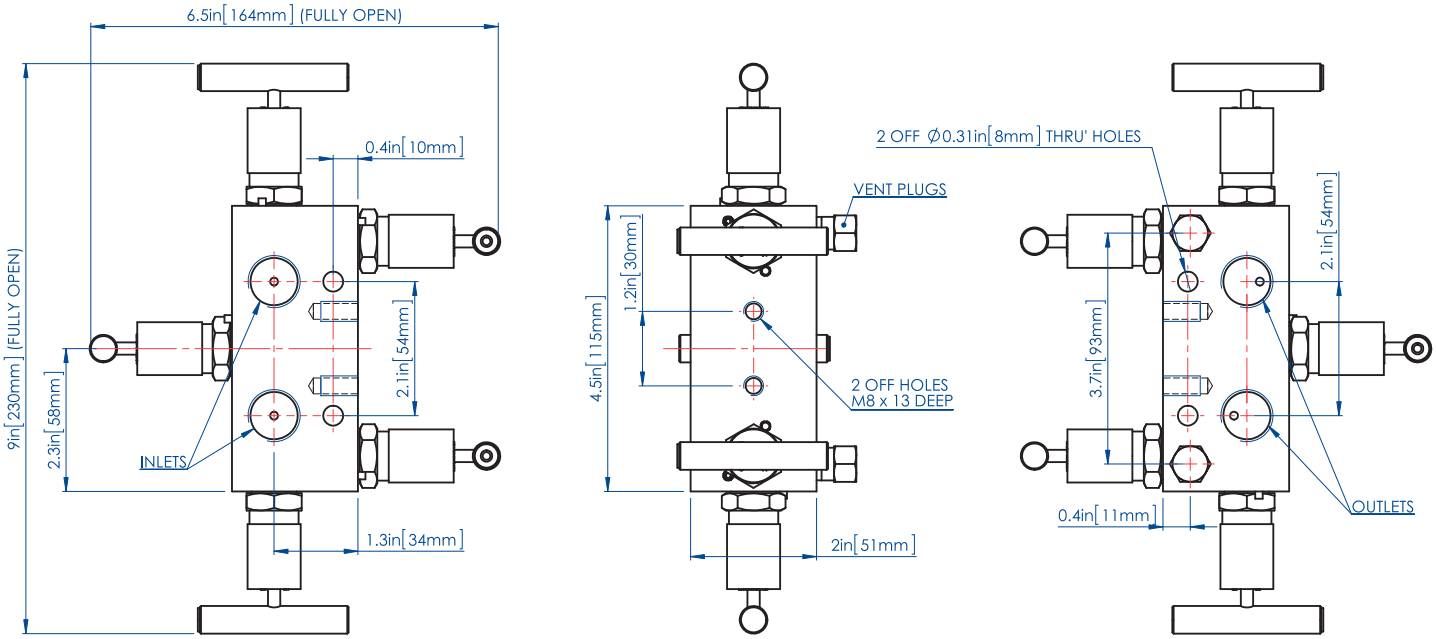

Dimensions shown in inches (millimeters) are for reference only and are subject to change.

DIRECT MOUNT 5-VALVE MANIFOLD
MODEL-HM8512

ISOLATE	Blue
VENT	Red
EQUALIZE	Green

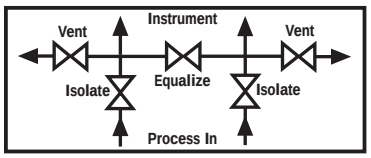

Weight=6.17 lbs(2.8 kg)

Also available in a range of other materials and options
(See **HOW TO ORDER** Data Sheet Pg. 22).

Note: Model-HM8512 **NOT** available with option AA — 10,000 psi

Using the 5-valve manifold

In normal operation the "isolate" valves are open while the "equalize" and "vent" valves are closed. This provides a differential pressure reading to the pressure gauge or transmitter. To zero the instrument, first close both "vent" valves and the downstream "isolate" valve. Then open the "equalize" valve and adjust the zero setting on the instrument. To remove the instrument, first close both "isolate" valves, then open the "equalize" valves to relieve pressure between the manifold and the instrument.

Calibration options

An option provided by 5-valve manifolds which is not available on 3-valve types is connecting the "vent" port to known pressure sources to check the calibration of the instrument.

Valve Shown with ½" NPT Inlet & ¼"NPT Vent Plugs (Supplied loose)

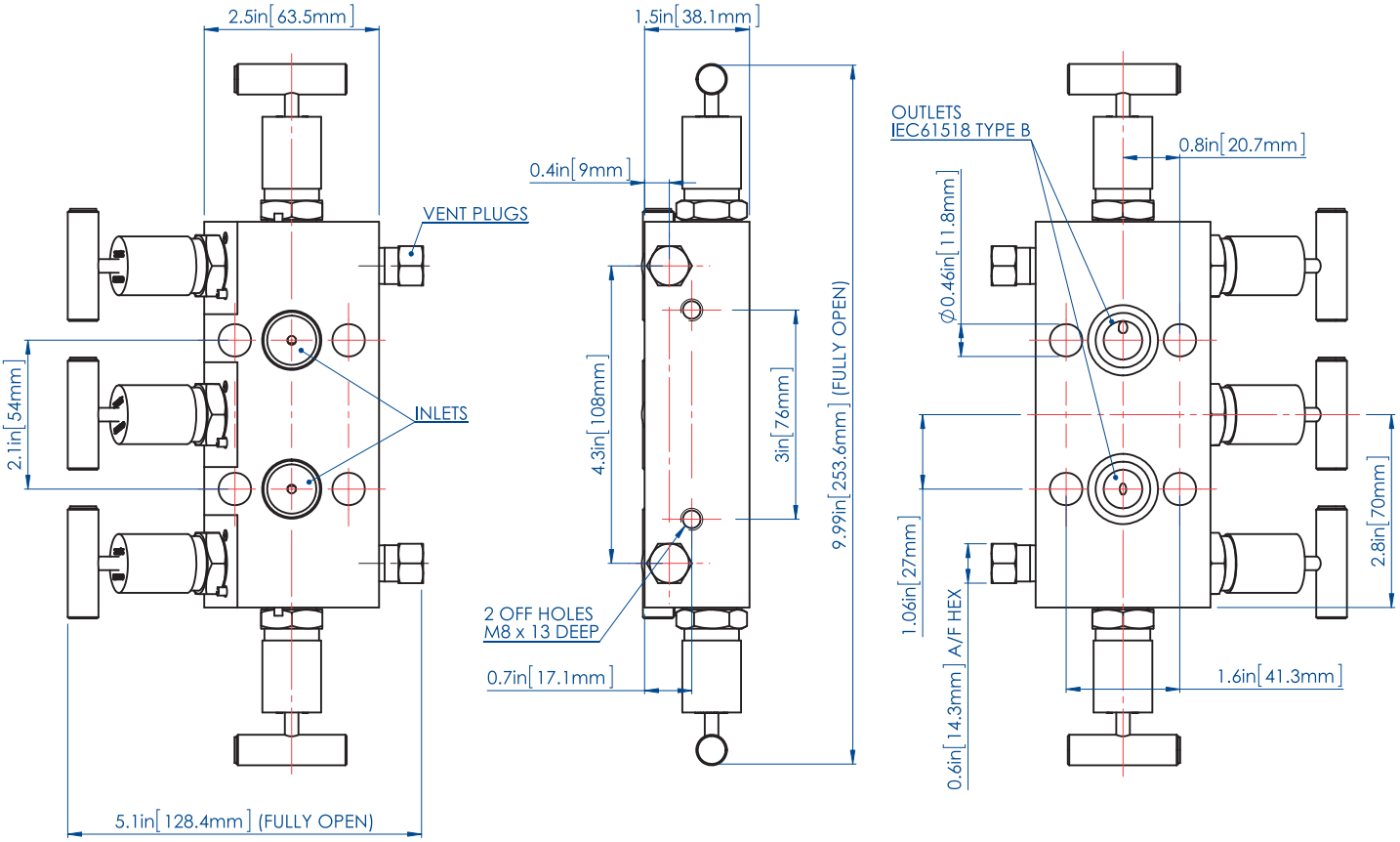

Dimensions shown in inches (millimeters) are for reference only and are subject to change.

DIRECT MOUNT 5-VALVE MANIFOLD (ENCLOSURE) MODEL-HM8592

ISOLATE	Blue
VENT	Red
EQUALIZE	Green

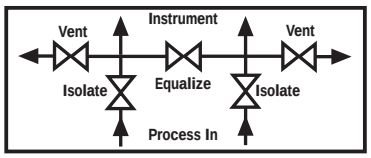

Weight=12.8 lbs(5.8 kg)

Also available in a range of other materials and options (See **HOW TO ORDER** Data Sheet Pg. 22).

Note: Model-HM8592 **NOT** available with option AA — 10,000 psi

Using the 5-valve manifold

In normal operation the "isolate" valves are open while the "equalize" and "vent" valves are closed. This provides a differential pressure reading to the pressure gauge or transmitter.

To zero the instrument, first close both "vent" valves and the downstream "isolate" valve. Then open the "equalize" valve and adjust the zero setting on the instrument. To remove the instrument, first close both "isolate" valves, then open the "equalize" valves to relieve pressure between the manifold and the instrument.

Calibration options

An option provided by 5-valve manifolds which is not available on 3-valve types is connecting the "vent" port to known pressure sources to check the calibration of the instrument.

Valve Shown with ½" NPT Inlet & ¼"NPT Vent Plugs (Supplied loose)

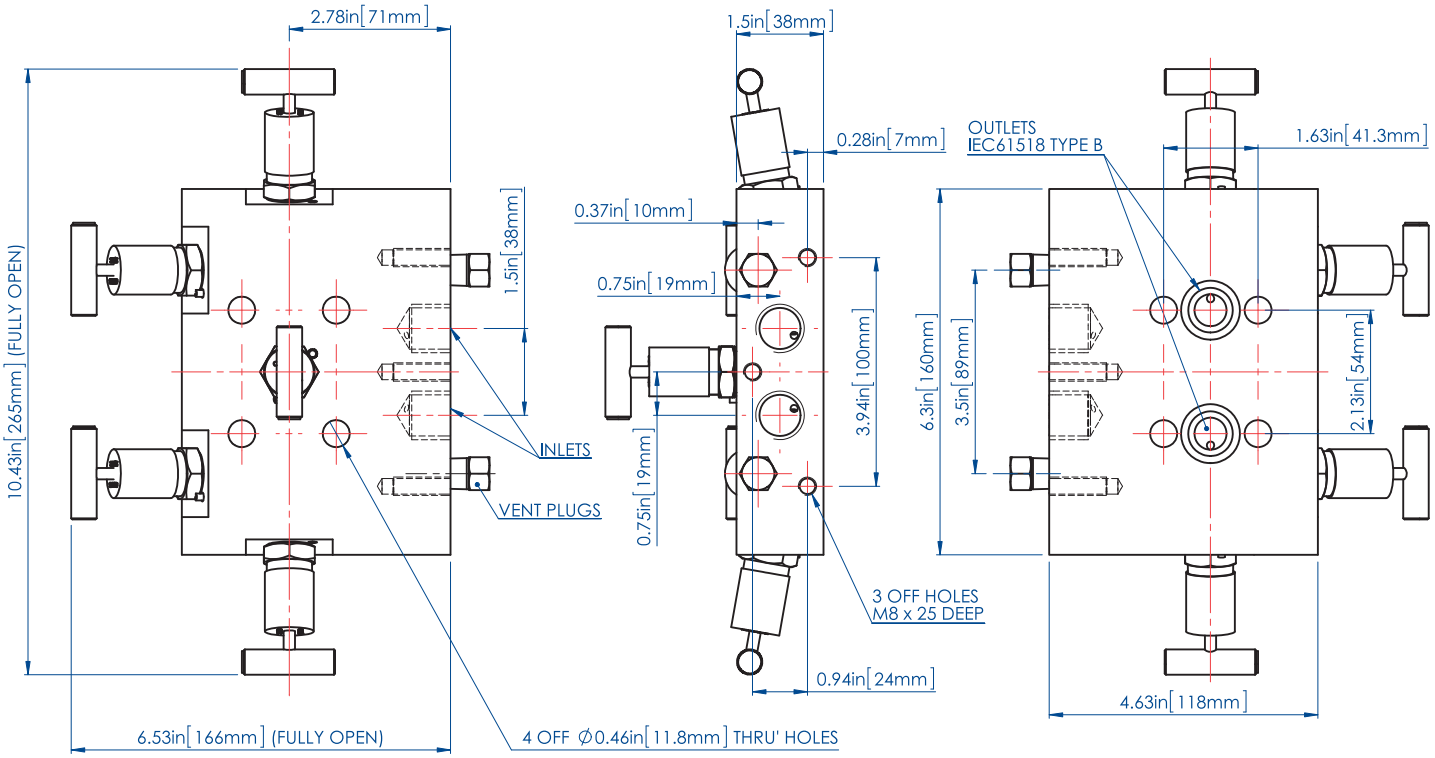

Dimensions shown in inches (millimeters) are for reference only and are subject to change.

Ordering Multiple Options

HOKE HM Valves and Manifolds are available with a wide variety of options that enable valve configurations customized to meet specific requirements. Please select or add designators from the ordering combinations as shown below:

How To Order

Standard items in bold.

Typical Ordering Part Number

HM8 3 1 2 1 1 F 8 6MO AA

# of VALVES
2
3
5

TYPE
1 = Direct [AA (10,000 psi) not available]
2 = Remote - Double Block & Bleed
3 = Remote
6 = Flat Face Remote
9 = Direct Enclosure [AA (10,000 psi) not available]

FIXED
2

TIP
1 = Hard
2 = Soft

PACKING
1 = PTFE
2 = GRAFOIL® [AA (10,000 psi) not available]

CONNECTION
F = Female
P = Socket Weld
G = Integral GYROLOK®
Z = Integral Metric
} HM Series - Integral GYROLOK® only. Refer to Integral catalog.

SIZE
8 = 1/2”

ALLOY
YL = 316/316L
HC = HASTELLOY® C276
M = MONEL®
D50 = Super Duplex
TI = Titanium
TB = Titanium Blue Anodized
DX3 = Duplex
625 = 625 INCONEL®
825 = 825 INCONEL®
6MO = 6%Mo
E = Carbon Steel

Options

AA = 10,000 psi Rated **(except for direct)**
AB = Anti Tamper Vent(s)
AC = Lockable Vent(s)
AD = Anti Tamper Isolate
AE = Lockable Isolate
AF = Anti Tamper Equalize
AG = Lockable Equalize
AH = BSPP Connections
AI = Std Carbon Steel Bolts Supplied Bolt Clearance 16MM
AJ = Std 316 Stainless Steel Bolts Supplied Bolt Clearance 16MM
AK = Std 6MO Bolts Supplied Bolt Clearance 16MM
AL = Extended Carbon Steel Bolts Supplied (Emerson Coplanar Flange) - Bolt Clearance 30MM
AM = Extended 316 Stainless Steel Bolts Supplied (Emerson Coplanar Flange) - Bolt Clearance 30MM
AN = Extended 6MO Bolts Supplied (Emerson Coplanar Flange) - Bolt Clearance 30MM
AO = Norsok M-650 Material Required
AP = Panel nut on bonnets
AR = Firesafe
AS = Round Hand Wheel for Vent
AT = Round Hand Wheel for Isolate
AW = Round Hand Wheel for Equalize
BC = Round Hand Wheel - Lockable Vent
BE = Round Hand Wheel - Lockable Isolate
BG = Round Hand Wheel - Lockable Equalize

Keys are not included and are sold separately. Order part number HMATHDL-316 for key.

Note: The body & trim parts on all 316/316L Valves & Manifolds comply to NACE MR-01-75 & NORSOK M-650 as standard.

Please consult the factory or your local distributor for information on special connections. O-rings, operating pressures, & temperature ratings.

⚠ When selecting products for specific applications users should refer to our notice at the bottom of page 1.
And the guidance of Use of Equipment on the Inside Back Cover Page.

DOUBLE BLOCK & BLEED VALVE
MODEL-HBDBB7V8F316

ISOLATE	Blue
VENT	Red
EQUALIZE	Green

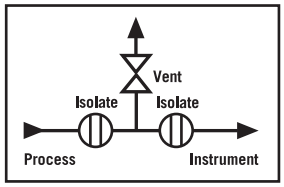

Weight=3.46 lbs(1.57kg)

Also available in a range of other materials and options
(See **HOW TO ORDER** Data Sheet Pg. 24).

Application
High integrity instrument isolation of pressure gauges and pressure transmitters.

Note: Available with Integral GYROLOK® connections.
Consult factory.

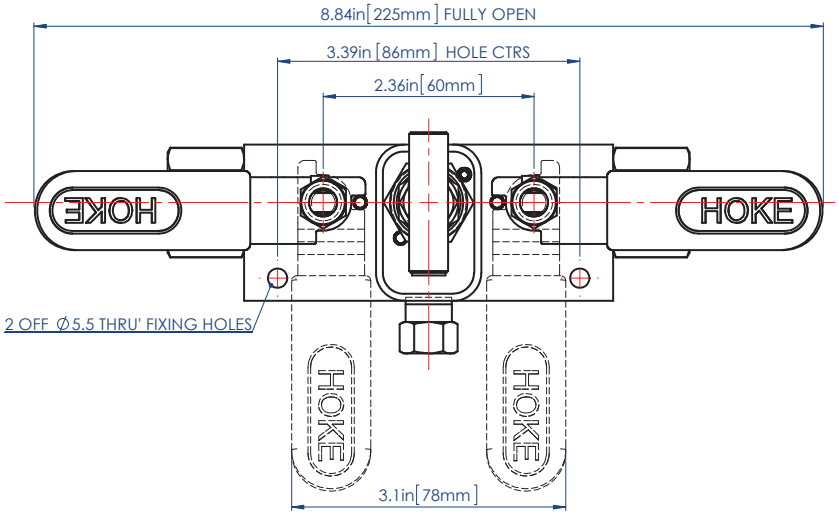

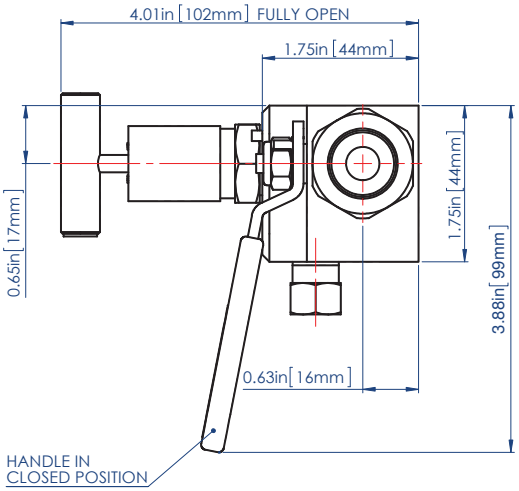

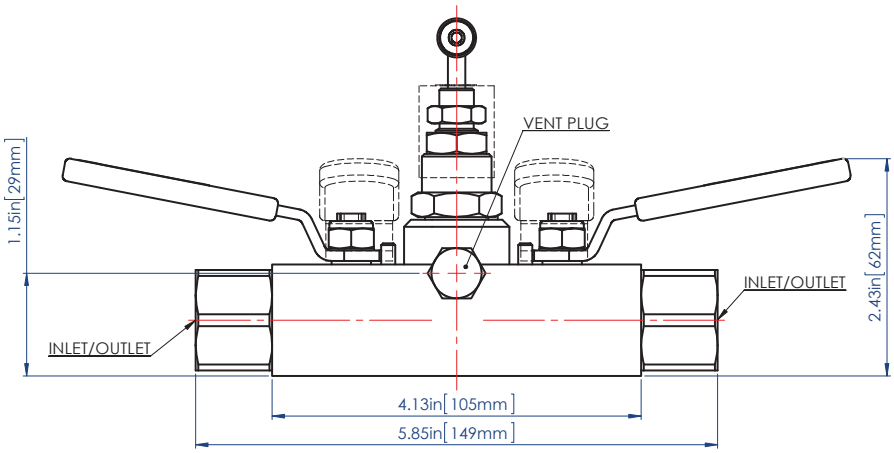

Ordering Multiple Options

HOKE HM Valves and Manifolds are available with a wide variety of options that enable valve configurations customized to meet specific requirements. Please select or add designators from the ordering combinations as shown below:

How To Order

Standard items in bold.

Typical Ordering Part Number

HBDBB7V 8 F 316 AB

SIZE
4 = ¼" NPT
8 = ½" NPT

CONNECTION
F = Female

ALLOY
YL = 316/316L
HC = HASTELLOY® C276
M = MONEL®
D50 = Super Duplex
TI = Titanium
TB = Titanium Blue Anodized
DX3 = Duplex
625 = 625 INCONEL®
825 = 825 INCONEL®
6MO = 6%Mo
E = Carbon Steel

OPTIONS
AB = Anti Tamper Vents
AC = Lockable Vents
AO = Norsok M-650 Material Required

Note: Keys are not included and are sold separately. Order part number HMATHDL-316 for key.

Note: The body & trim parts on all 316/316L Valves & Manifolds comply to NACE MR-01-75 & NORSOK M-650 as standard.

Please consult the factory or your local distributor for information on special connections. O-rings, operating pressures, & temperature ratings.

⚠ When selecting products for specific applications users should refer to our notice at the bottom of page 1. And the guidance of Use of Equipment on the Inside Back Cover Page.

HOKE® Integral GYROLOK® Tube Fitting Connections

Please refer to the HOKE® HM Series - Integral GYROLOK® catalog for product information, specifications and how to order integral connection versions of these valves and manifolds. **Note:** Graphic is an illustration only – please consult HOKE® for details

The HOKE® range of standard hand valves, gauge valves and manifolds are available with the option of the integral GYROLOK® tube fitting connections. The integral GYROLOK® tube fitting connection is machined directly into the body of the valve or manifold, allowing tubing to be directly connected without the use of traditional threaded (NPT, BSP) connections. The integral GYROLOK® connection provides a safer connection system for high pressure, severe, steam or sour gas service where leakage has dangerous consequences.

- Eliminates traditional threaded tubing connections
- Provides a safer and more consistent tube connection
- Saves assembly time during field assembly
- Reduces potential leak paths
- No need for sealing tape or liquid sealing compounds
- Fully field maintainable
- Successfully used for over 20 years in many offshore applications
- Available in 1/2" and 10mm tube connections

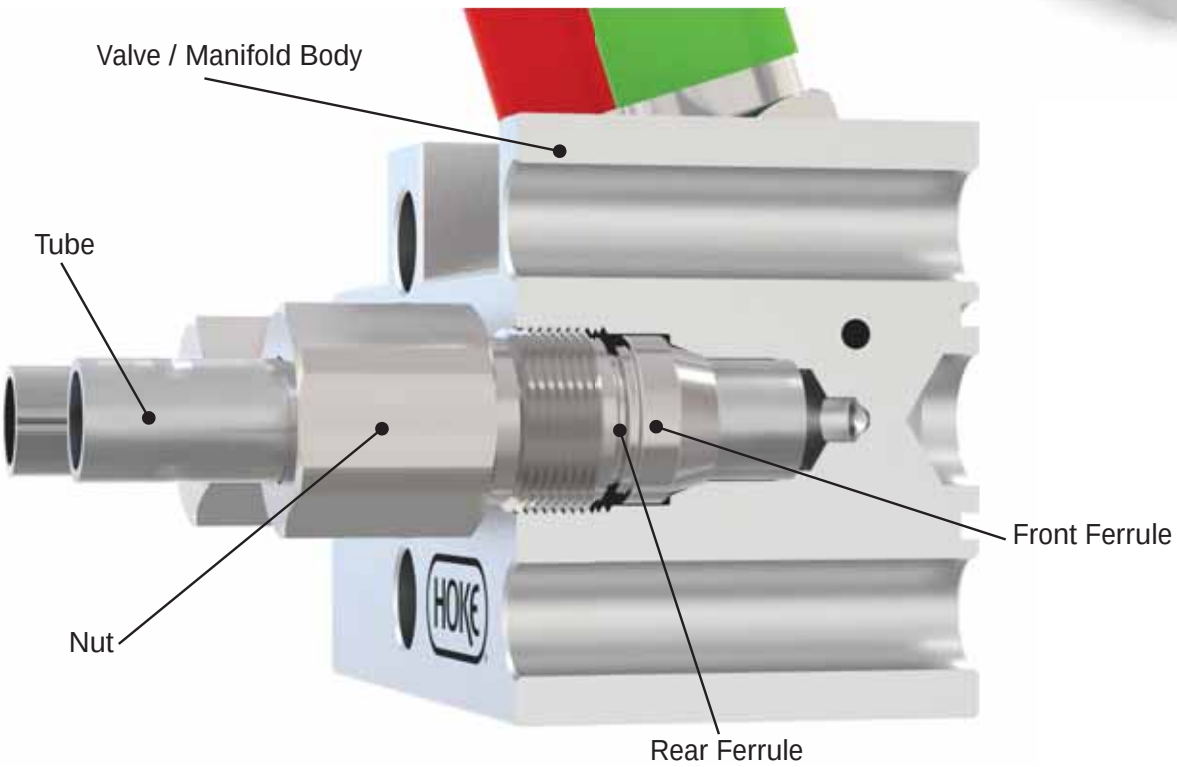

HOKE® HIGH TOLERANCE NPT THREAD

Note: Graphic is an illustration only

NPT Engagement using High Tolerance HOKE® NPT Connections has 5-6 threads engaged when fully tightened.

NPT Engagement using ANSI/ASME B1.20.1 Pipe Thread Standard has only 3-4 threads engaged when fully tightened.

HOKE® High Tolerance NPT Thread

Standard B1.20.1 NPT Thread

OPTION DETAIL
Anti Tamper & Lockable Bonnet (without padlock)

HM682 shown with Anti-Tamper and Lockable Isolate and Vent

Order key handle separately.
Part # HMATHDL-316

Anti-Tamper

Anti-Tamper and Lockable

Anti-Tamper and Lockable Bonnet (without padlock)

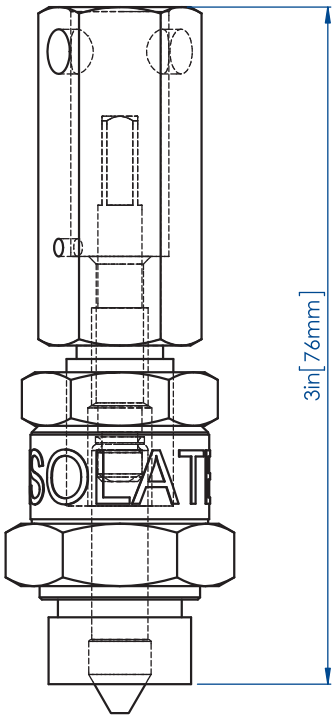

Ant-Tamper Bonnet

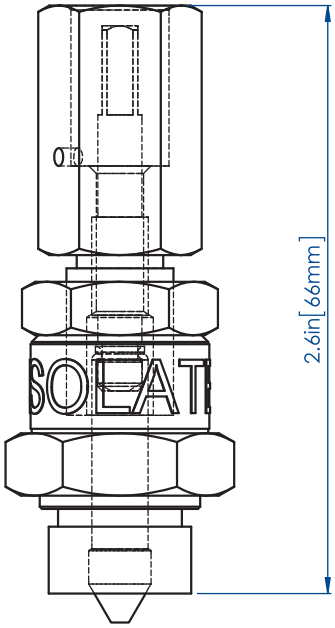

OPTION CODES	
AB	Anti Tamper Vents(s)
AC	Lockable Vent(s)
AD	Anti Tamper Isolate
AE	Lockable Isolate
AF	Anti Tamper Equalize
AG	Lockable Equalize

HM682 shown with round 316SS handwheel - Lockable isolate and vent

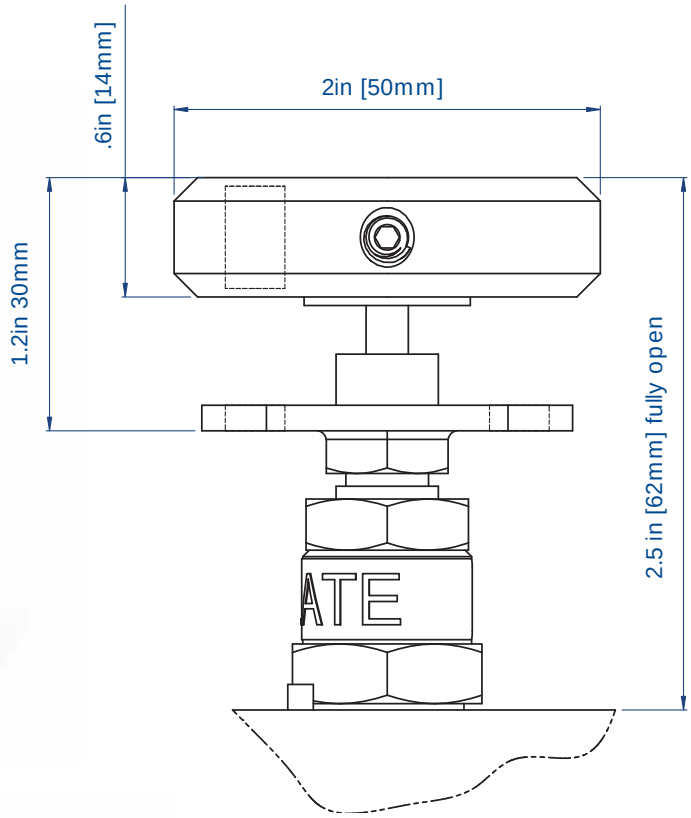

HM682 shown with round 316SS handwheel - isolate and vent

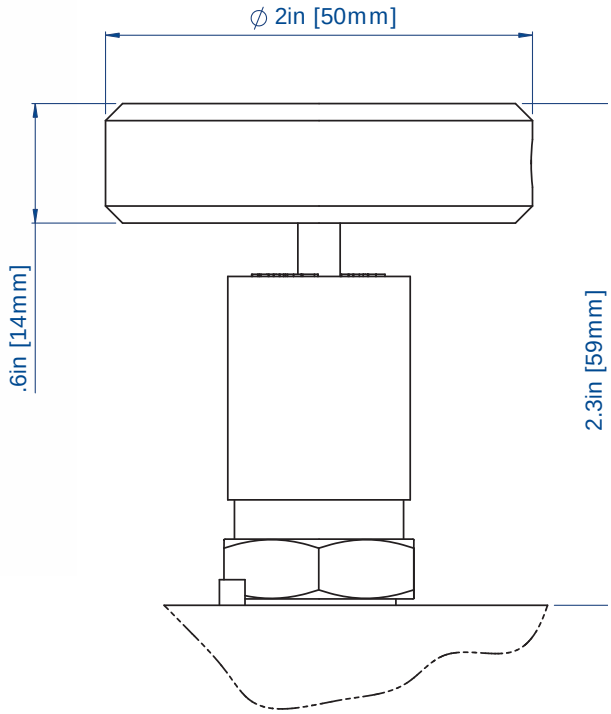

OPTION CODES	
AS	Round Hand Wheel for Vent
AT	Round Hand Wheel for Isolate
AV	Round Hand Wheel for Equalize
BC	Round Hand Wheel - Lockable Vent
BE	Round Hand Wheel - Lockable Isolate
BG	Round Hand Wheel - Lockable Equalize

Model # HM25 shown
with Option AP

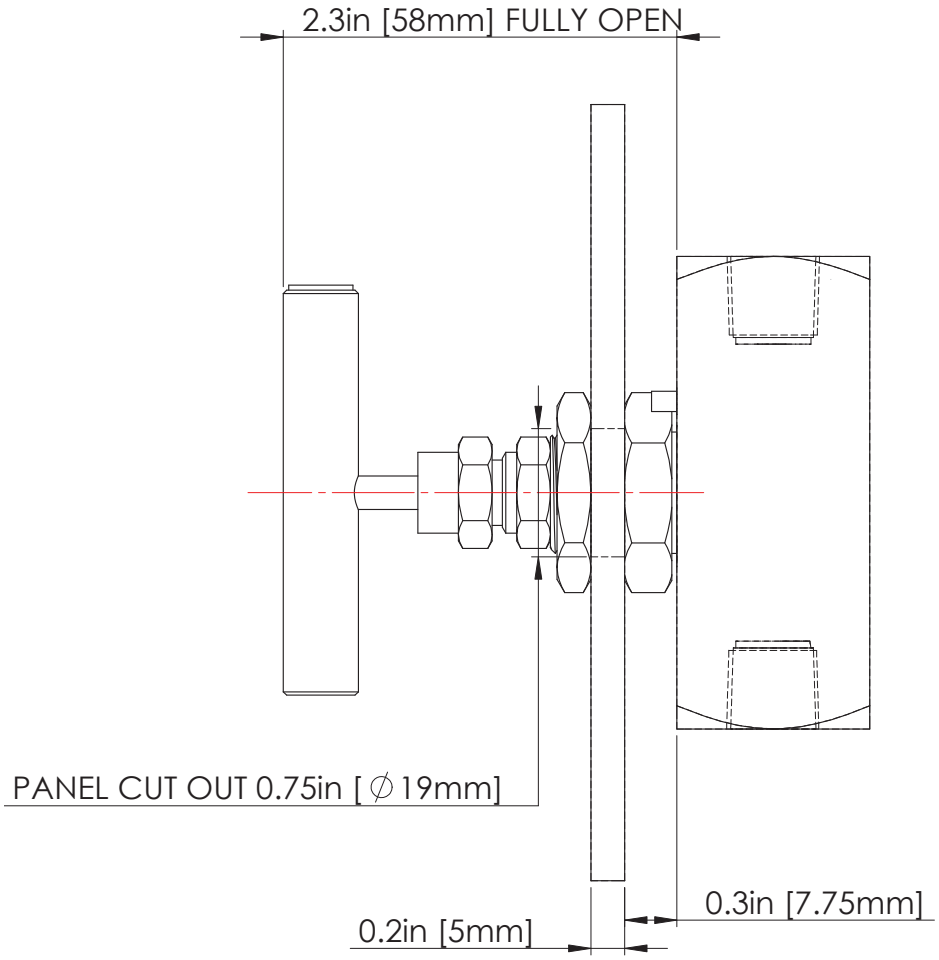

Mounting bracket kits enable a user to mount a manifold onto a gauge stand or a 2" (50mm) nominal bore pipe stand. Mounting kits are manufactured in stainless steel and allow the instrument to be removed without disturbing the impulse pipework connection. They also add support to the complete assembly.

Order Part Number
HM8512BKT
Weight=2.20 lbs(1.0 kg)
Used On Model HM8512 (Direct)

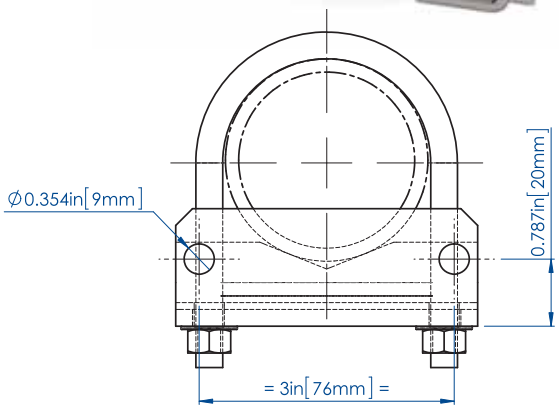

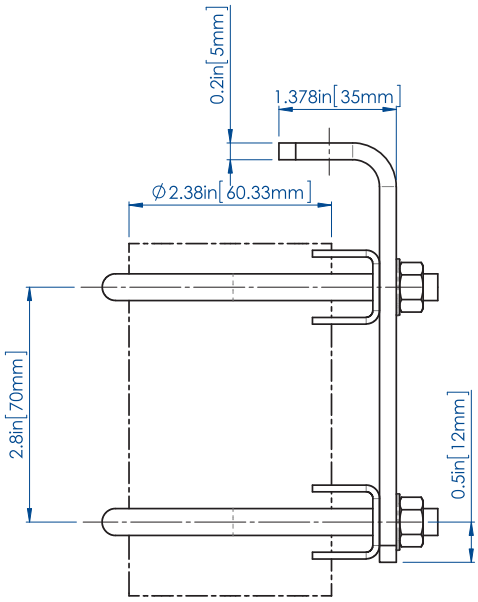

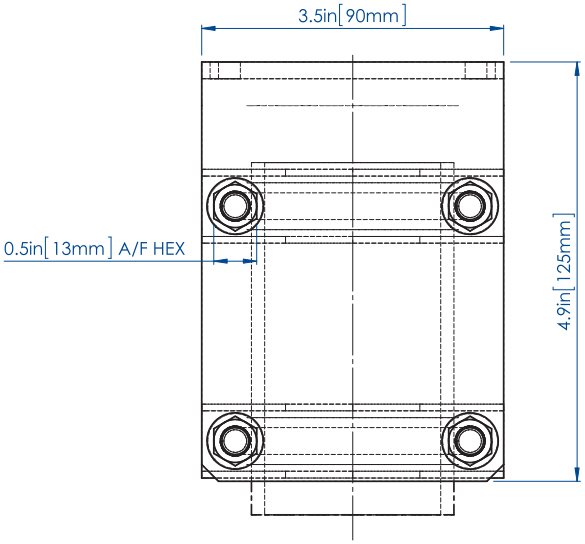

Dimensions shown in inches (millimeters) are for reference only and are subject to change.

Order Part Number
HM8000BKT
Weight=2.20 lbs(1.0 kg)
Used On Model HM8212 (Direct)
and HM8332 (Remote)

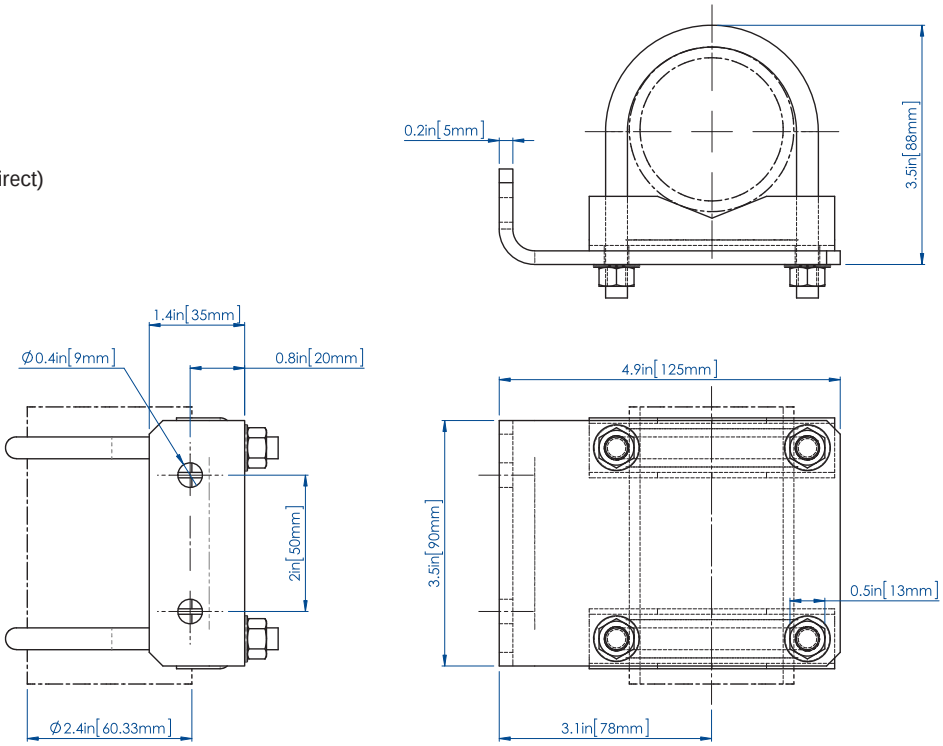

Order Part Number
HM682BKT
Weight=2.20 lbs(1.0 kg)
Used On Model HM682 (Remote)

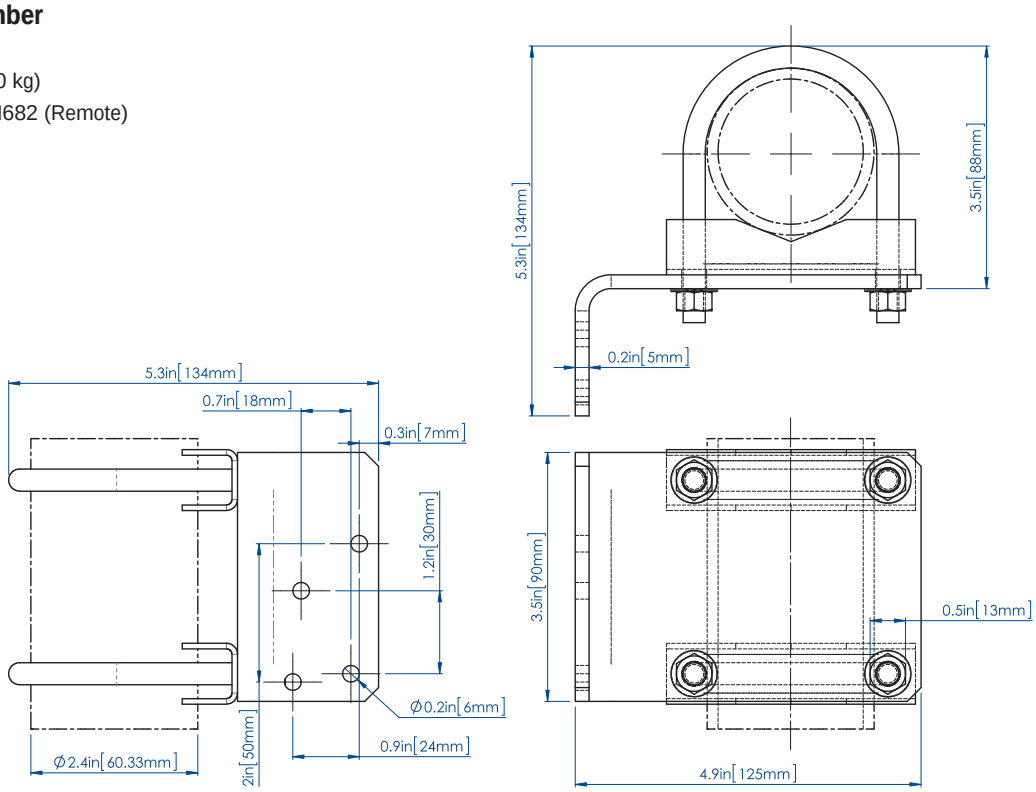

Dimensions shown in inches (millimeters) are for reference only and are subject to change.

Order Part Number
HM8100BKT
Weight=2.20 lbs(1.0 kg)
Used On Model HM8232 (Remote)
and HM8312 (Direct)

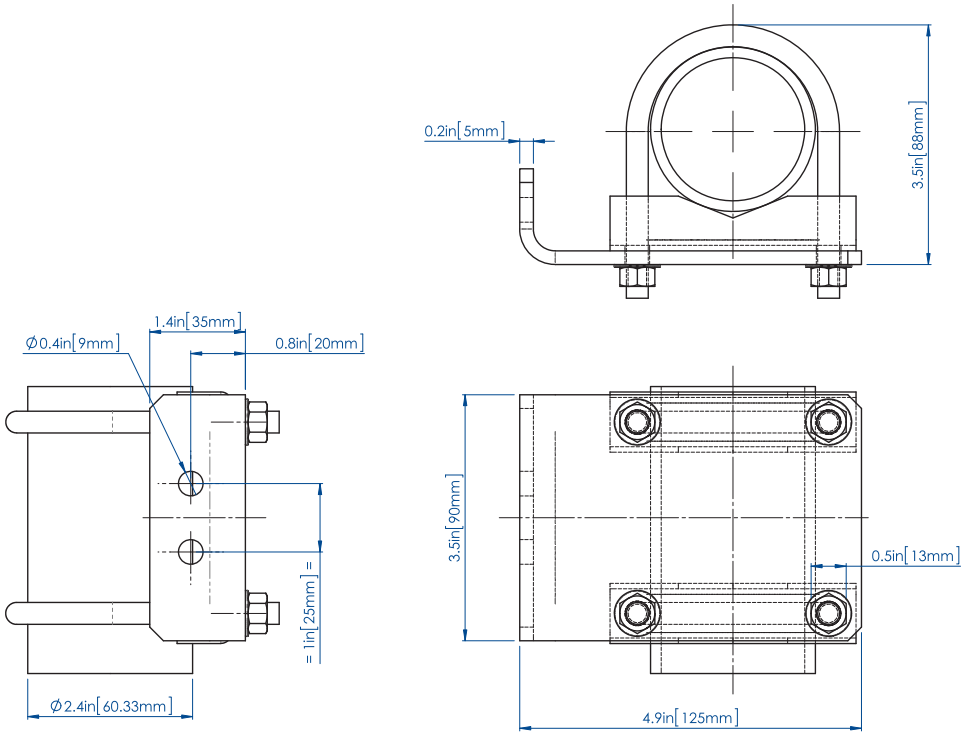

Dimensions shown in inches (millimeters) are for reference only and are subject to change.

⚠ When selecting products for specific applications users should refer to our notice at the bottom of page 1. And the guidance of Use of Equipment on the Inside Back Cover Page.

Installation & use of equipment should be done by trained personnel!

MATERIALS

- Materials must be compatible with medium.
- Pressure and temperature also have direct bearing on the correct seal & body material to be used and must be considered when specifying. See pressure/temperature ratings table contained in our printed literature.
- If in any doubt, consult HOKE®.

THREADS AND JOINTING

- All pressure connections should be leak tight and should be observed when first applying pressure.
- Recommended maximum operating pressure for each size of thread and type of material must not be exceeded. Please note the stated pressures represent the maximum applied pressure. If in doubt, consult the manufacturer.
- Care must be taken to ensure mismatch of threads does not occur.
- Mating female connections must have a pressure rating that is compatible with the pressure range of the product.
- Valves with parallel threads must have the independent seal made on the flat seating using a washer or bonded seal of material compatible with the pressure medium.
- Valves with tapered threads have the joint made by mating of the threads. It is common practice to apply jointing material to the male thread. This must be compatible with the pressure medium and applied in the correct quantity to ensure non-interference with the mating of the threads.
- NPT and other tapered thread forms when manufactured to the standard specification may not be adequate to offer sufficient thread engagement for safe use under pressure.
- Particular care must be taken to ensure the valve has the correct pressure rating for the application.

INSTALLATION

- When joining up a valve to the system, the system must not be pressurized.
- If the valve is already fitted to a gauge at time of installation, the valve should be in the closed position to prevent the build up of pressure from entering the gauge. The valve should then be opened slowly and care taken to ensure the pressure entering the gauge does not exceed its pressure rating.
- When the valve does not have a gauge fitted at time of installation (i.e., with an open port) the valve should be in the open position which will prevent build up of pressure within the valve. Care should therefore be taken to confirm that all systems are sealed before pressurizing.
- Manifolds and equalizing valves are accompanied by specific installation instructions and these should be referred to before proceeding with installation.

MAINTENANCE

- Valves etc. should be part of a planned maintenance program to ensure they continue to function properly.
- The time interval between examinations will vary depending upon site conditions, the number of opening and shutting operations etc. and should be determined in the light of experience.
- Threaded connections should be checked for leaks and tightened as required.
- If leaking through the packing is evident, loosen locknut, tighten packing compression bolt to torque rating of 13 lbs/ft (18 Nm) minimum to 18 lbs/ft (25 Nm) maximum and re-tighten locknut.

REPAIRS

- The design of these valves allows packing or whole stem assembly to be replaced without removing the valve from the system but the system must be closed down and any residual pressure exhausted in a controlled manner before proceeding.
- To replace packing: Remove handle, slacken locknut, remove compression bolt and compression gland ring. Remove packing and replace. Re-assemble in reverse order to the above and tighten to torque described above.
- To replace whole stem assembly: Remove handle and bonnet locking pin. Remove whole head assembly (N.B. To loosen - turn anti-clockwise). Slacken locknut, remove compression bolt and compression gland ring. Remove stem assembly by withdrawing downwards. Fit new stem assembly and packing.
  Re-assemble in reverse order to the above and tighten compression bolt to torque described above.

  Re-fit head assembly to valve body and tighten to torque of 100 lbs/ft (135.58Nm) Replace locking pin. Test valve for leaks.

  Note: Ensure stem is screwed fully into the bonnet before refitting to body. Fit locking pin, after testing.
- If the valve seat is damaged, the whole valve should be replaced.

SPARES

- We recommend that spares should be held in the form of whole stem assemblies.

Note: It is the responsibility of the customer to select the proper valve. If in any doubt, consult HOKE®.

The Small Bore Instrumentation Specialists

We specialize in small bore instrumentation products up to 2" that deliver benchmark performance quality & safety; provide the broadest array of superior alloy offerings in the market; decades of proven success in a wide range of industries; a roster of "who's who" customers & projects globally; original "Best Solution" engineering & designs; and are focused on continuous improvement in all aspects of our business.

Proudly Distributed By:

CRANE INSTRUMENTATION & SAMPLING Inc.
405 Centura Ct.
Spartanburg, SC 29305, USA

Tel: 1-864-574-7966
PO Box 4866, Spartanburg, SC 29305-4866 USA

79028 03/12/20 APS3059